I³N Innovative Integrated Instrumentation for Nanoscience

polifab POLITECNICO DI MILANO

POLITECNICO MILANO 1863

High Resolution Electronic Measurements in Nano-Bio Science

Electrical measurements in liquids

Basic considerations

Giorgio Ferrari

Milano, June 2023

Outline

- Example of electrical measurements in liquid
- The electrical behavior of the (bulk) liquid
- Metal – liquid interface: charge redistribution
  - Double-layer capacitance

Next lessons:

- Charge transfer at the metal-liquid interface
- The importance of the mass transport

Example 1

Oil

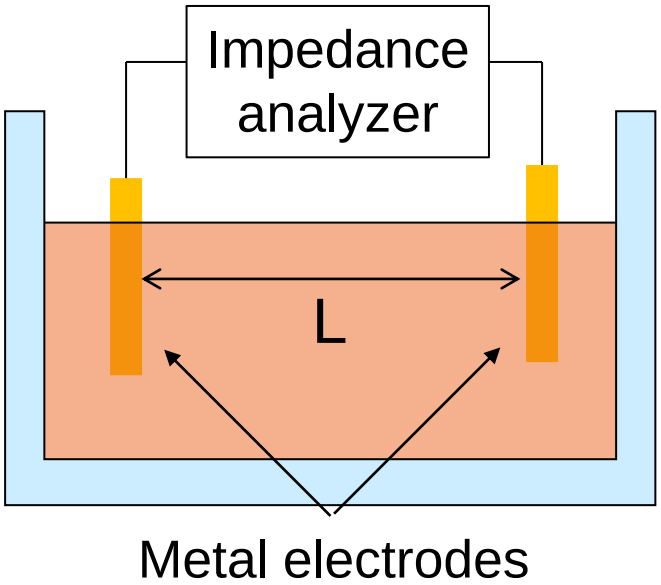

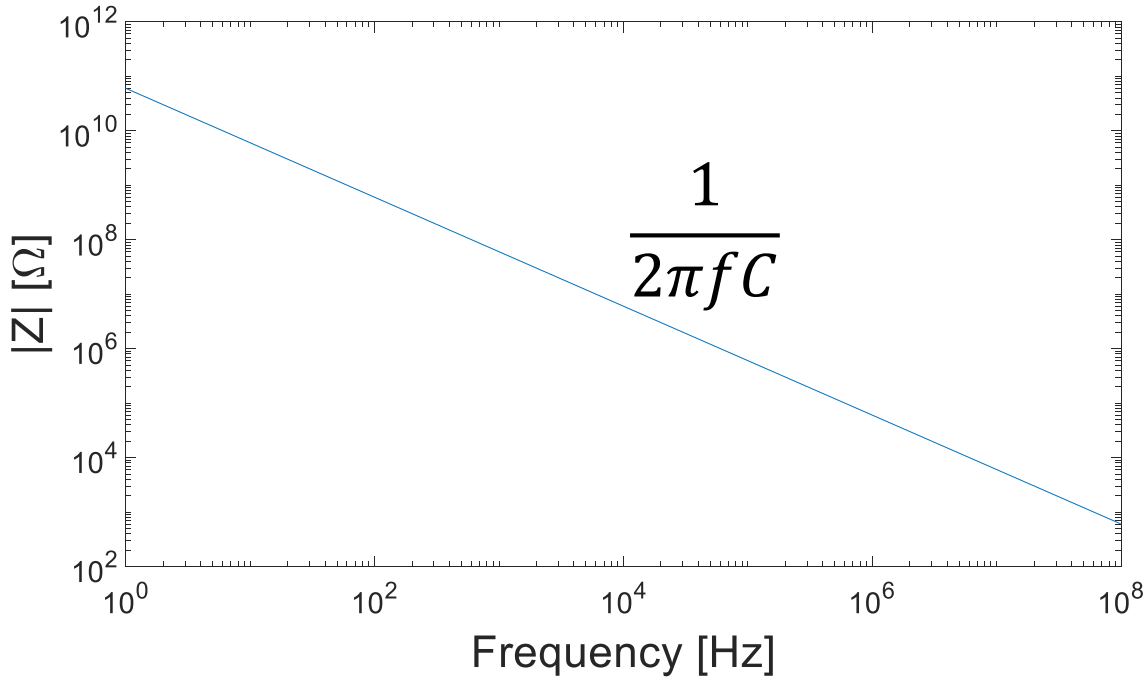

Parallel plate electrodes

A_{el}= 1cm x 1cm

L= 1mm

- Capacitive behavior $Z(f) = \frac{1}{j2\pi f\ C}$

$$C = \epsilon_r \epsilon_0 \frac{A_{el}}{L}$$

Example 2

Distilled water

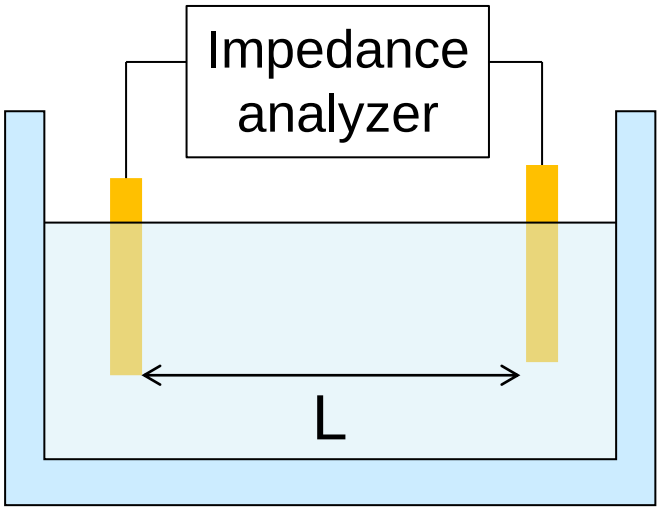

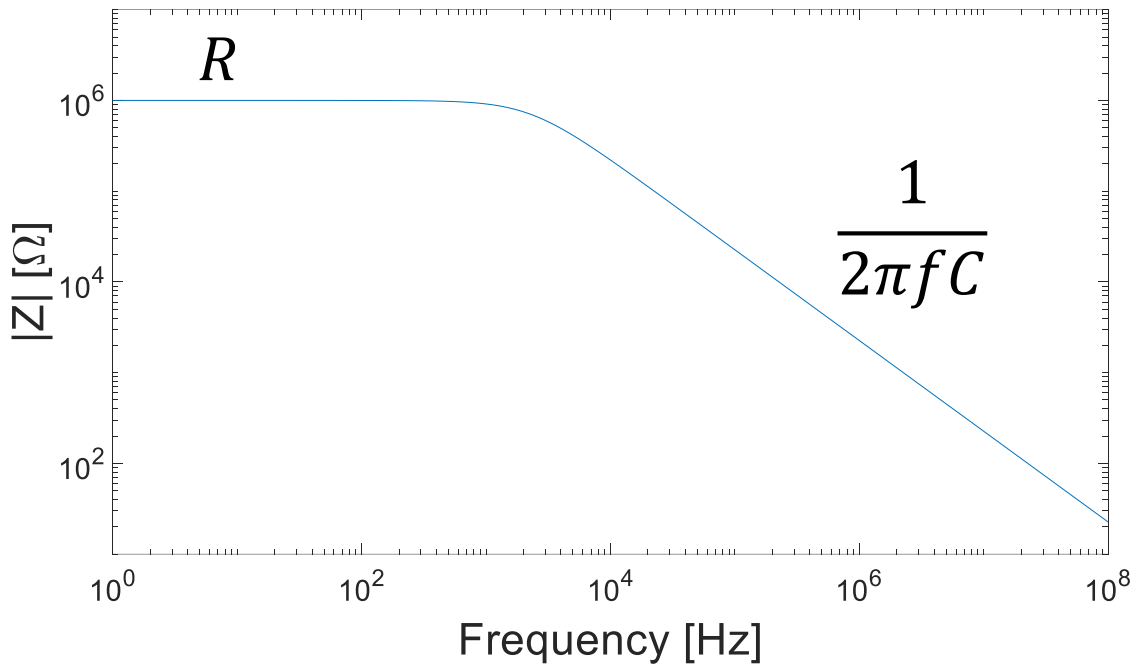

Parallel plate electrodes

A_{el}= 1cm x 1cm

L= 1mm

- Low frequency: resistive behavior
- High frequency: capacitive behavior

Example 3

Tap water

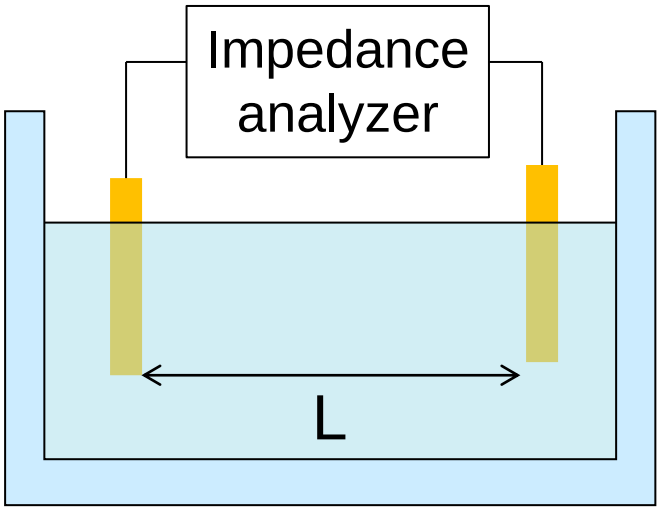

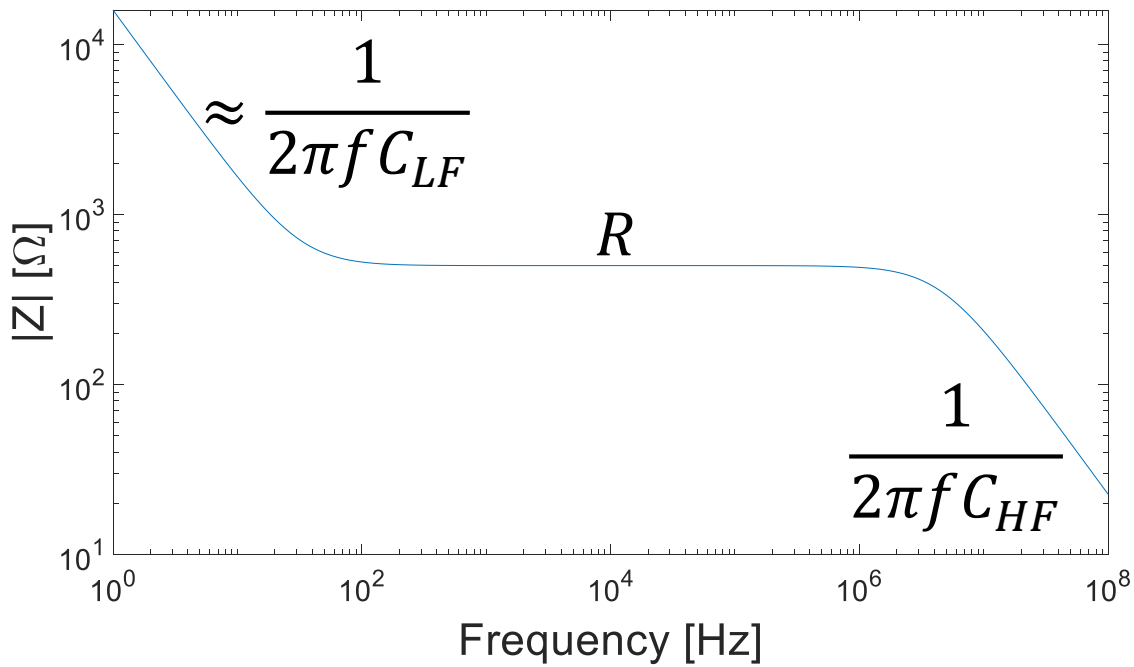

Parallel plate electrodes

A_{el}= 1cm x 1cm

L= 1mm

- Low frequency: ≈capacitive behavior
- Medium frequency: resistive behavior
- High frequency: capacitive behavior

The role of the ions

Oil

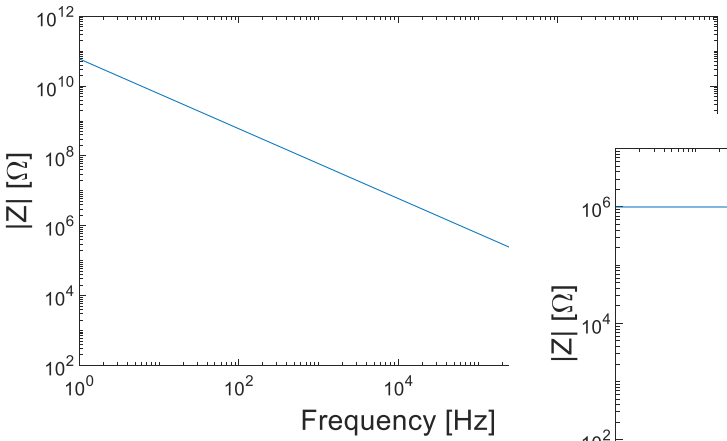

No ions

Distilled water

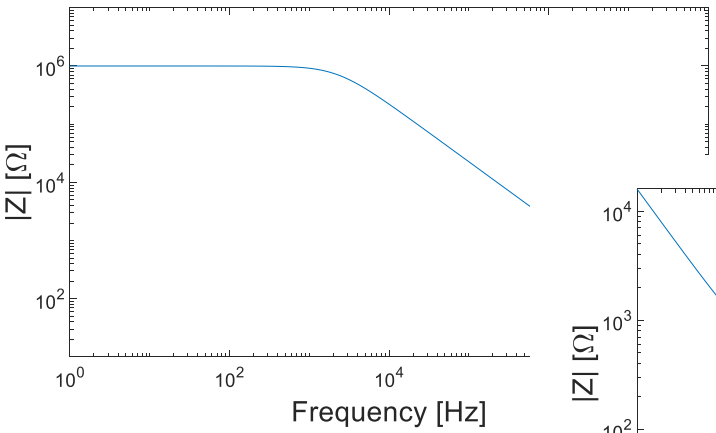

Few ions

Tap water

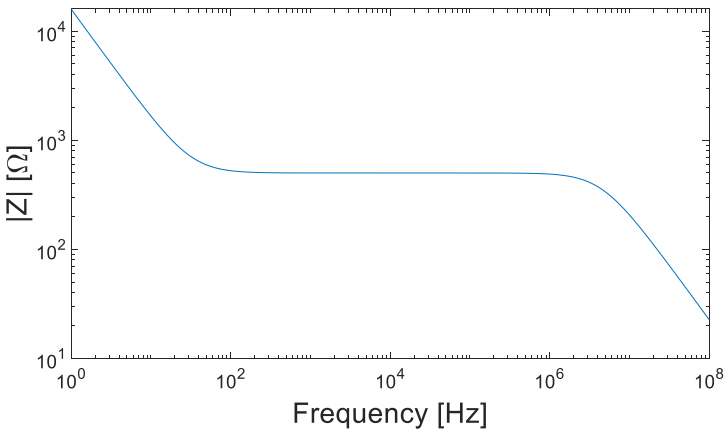

Many ions

The main difference is given by the number of charge carriers

- Ions
- Charged particles

Nonionic liquids

No ions or charged particles

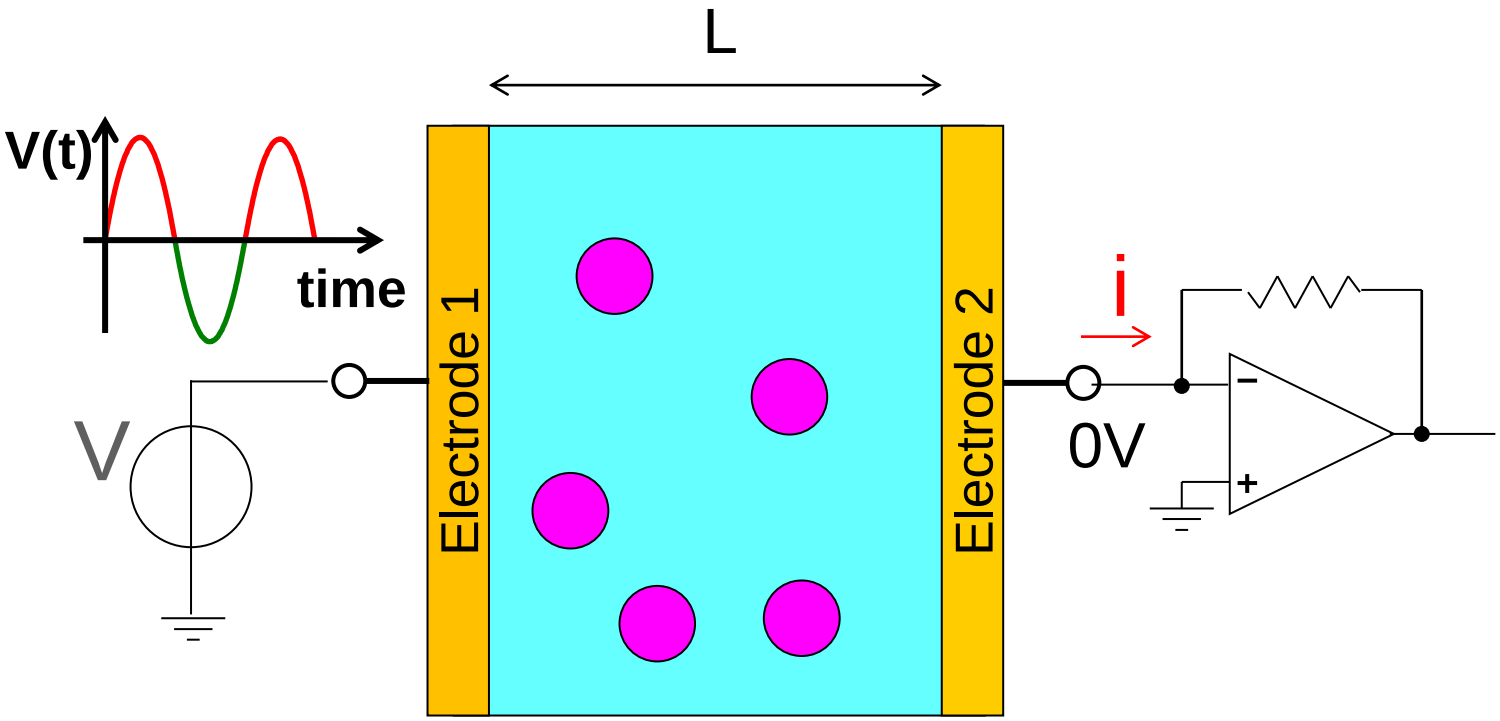

Non-polar molecule (oil)

Nonionic liquids

No ions or charged particles

Dielectric behavior

no charge available for conduction.

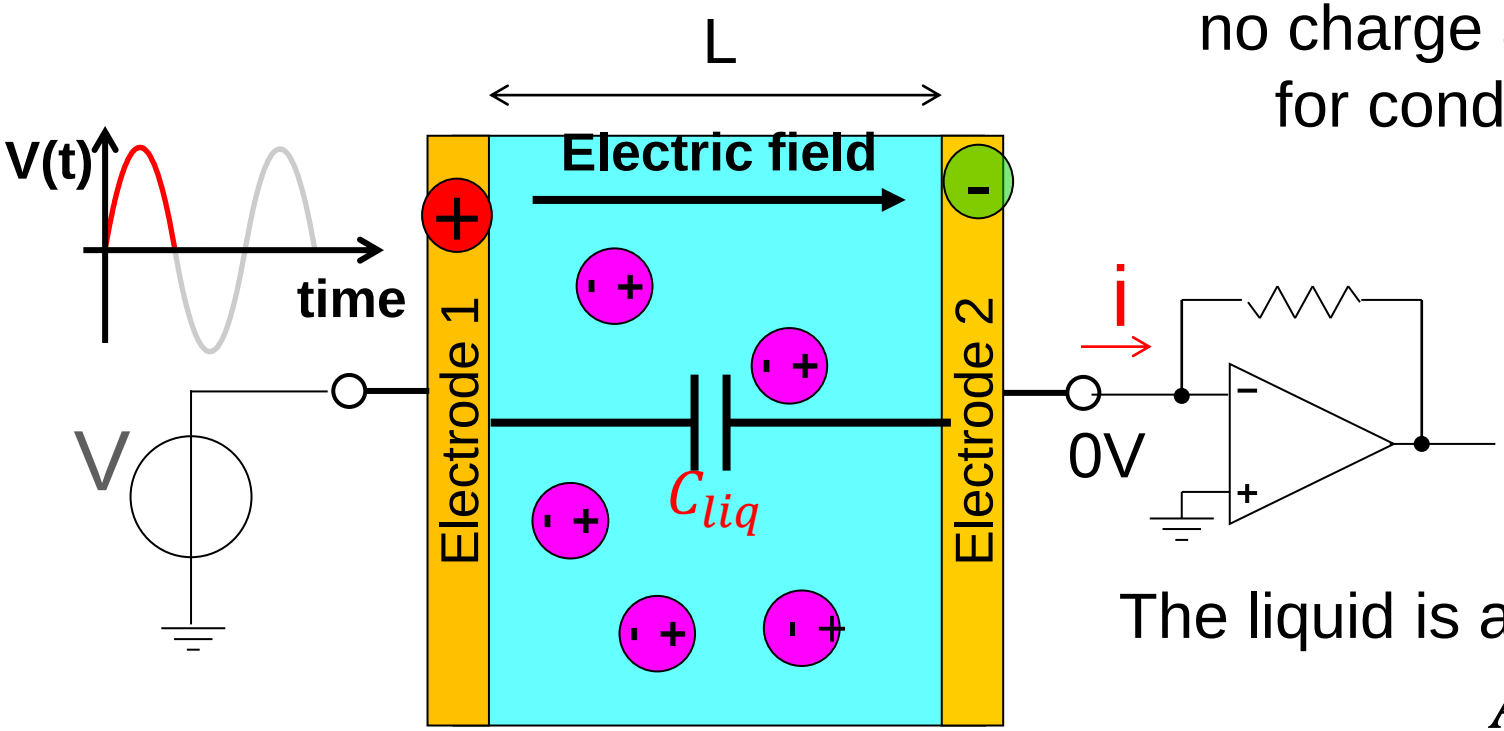

The liquid is a capacitor:

$$C = \epsilon_r \epsilon_0 \frac{Area}{L}$$

Non-polar molecule (oil)

Non-polar liquids have commonly a low dielectric constant ($\varepsilon_r \approx 1.5 - 4$)

Nonionic liquids

No ions or charged particles

Dielectric behavior

no charge available for conduction.

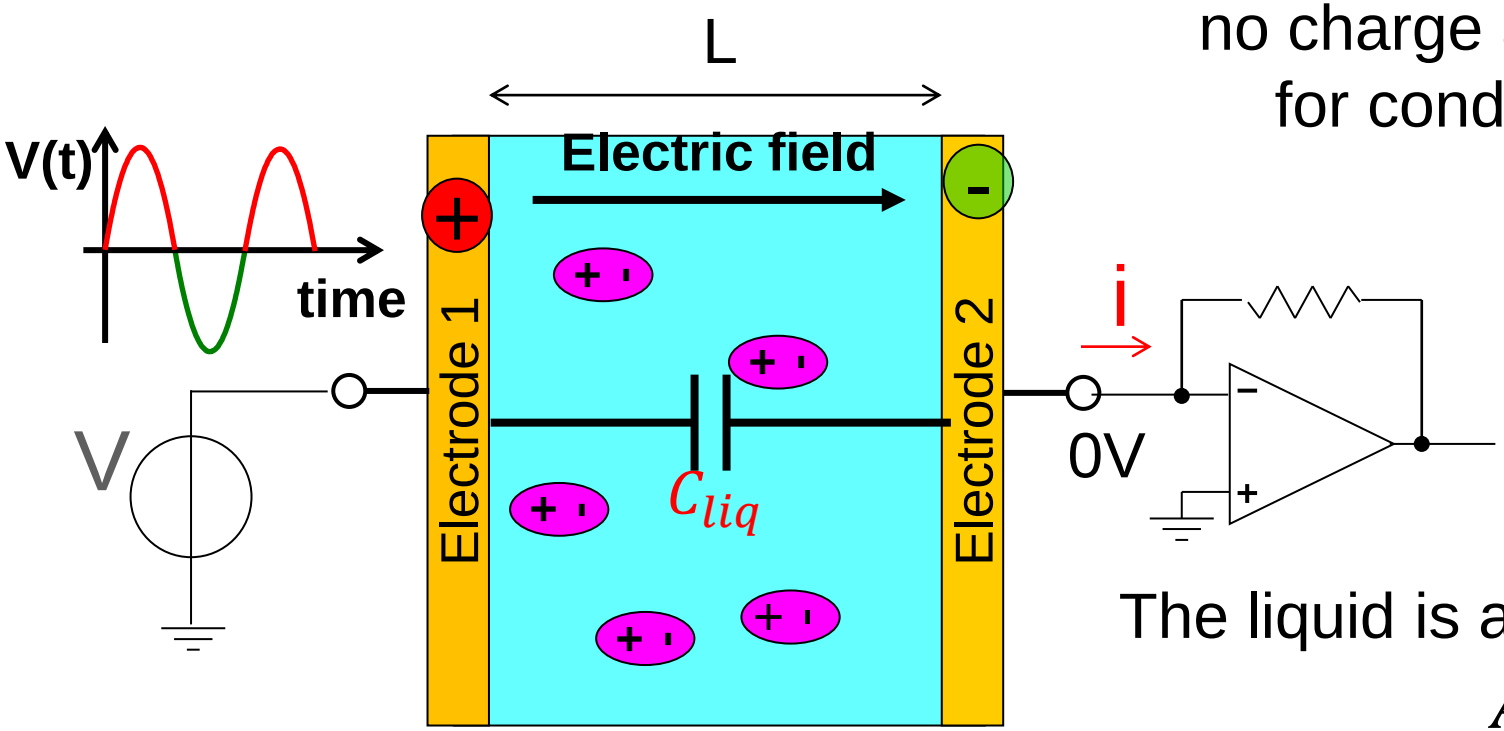

The liquid is a capacitor:

$$C = \epsilon_r \epsilon_0 \frac{Area}{L}$$

Polar molecule (water) → orientation of the molecule

→ High dielectric constant (>10)

Water: $\varepsilon_r \approx 78$

Ex. of electrical meas. of nonionic liquids

Liquid level sensors

Electrode area: d · W

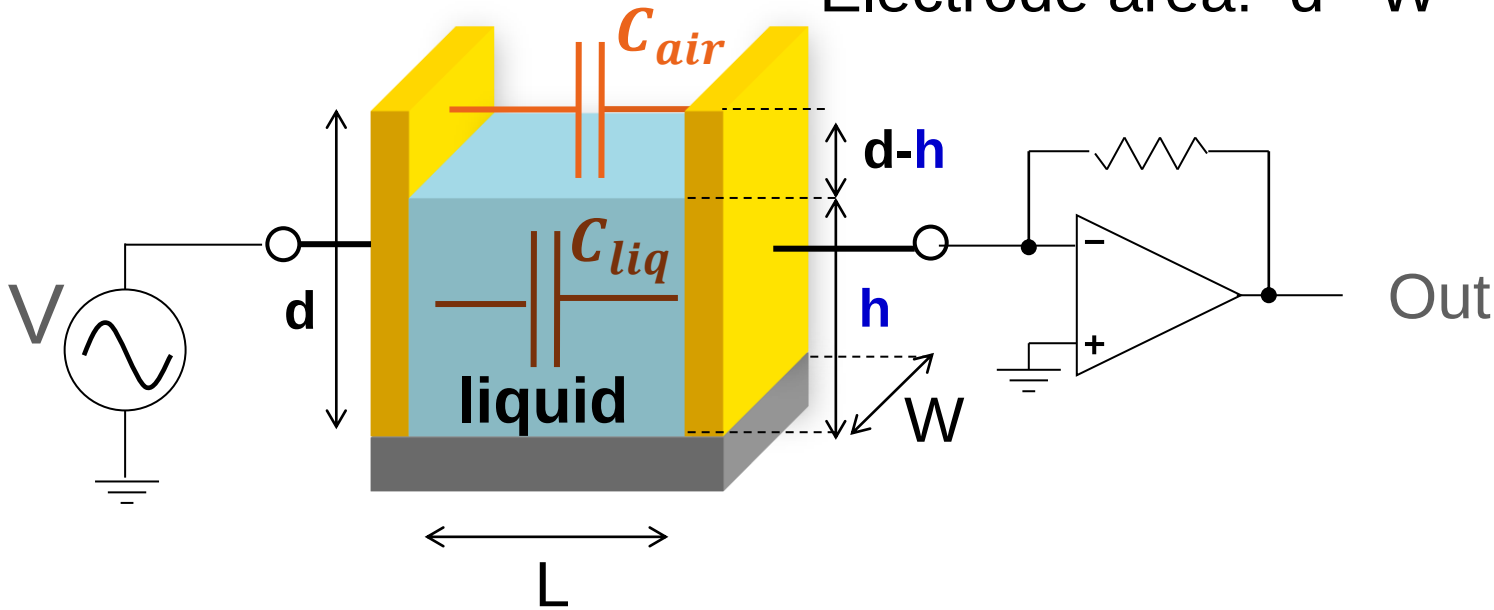

$$C_{meas} \approx \frac{W}{L}\left[\epsilon_{liq}\,\boldsymbol{h} + \epsilon_{air}\,(\boldsymbol{d} - \boldsymbol{h})\right] = \frac{W}{L}\left(\epsilon_{liq} - \epsilon_{air}\right)\boldsymbol{h} + \frac{W}{L}\epsilon_{air}\boldsymbol{d}$$

No specific instrumentation or measurement technique

Ex.: analysis of suspended particles

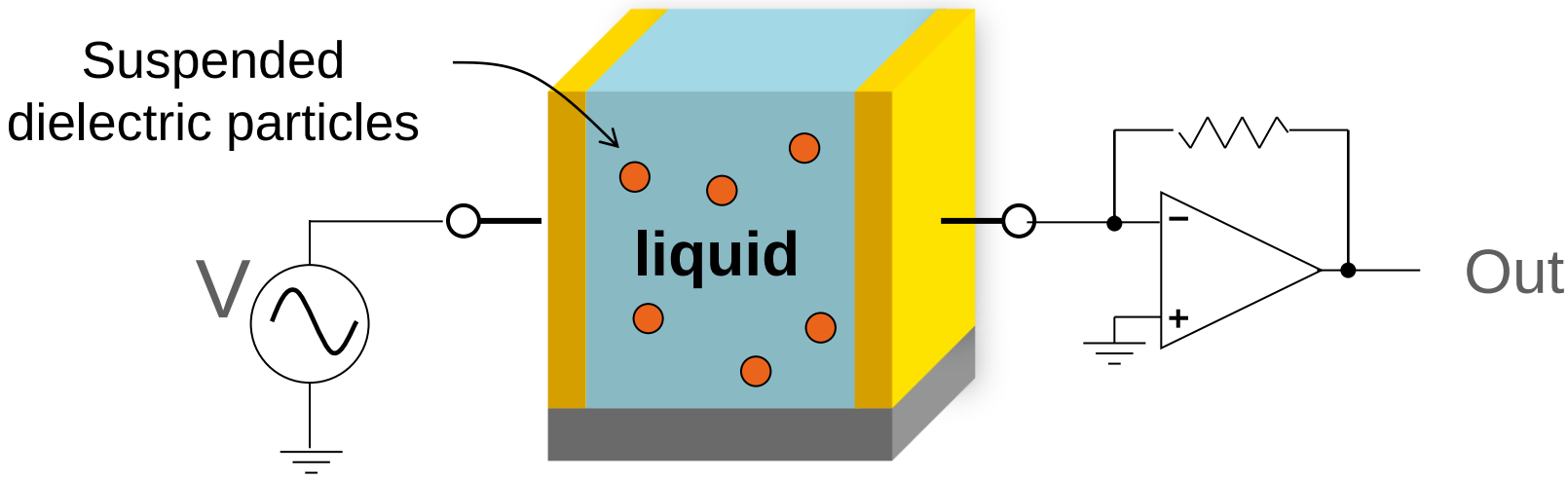

$C_{liquid\ only} = \varepsilon_l \cdot S$ ε_l dielectric constant of the liquid, S geometrical factor

$C_{liquid+particles} = \varepsilon_e \cdot S$ → $\varepsilon_e = \varepsilon_l\ C_{liquid+particles}/C_{liquid\ only}$

For small particles (<10μm, effective medium theory):

$$f\,\frac{\epsilon_p - \epsilon_e}{\epsilon_p + 2\epsilon_e} = (1-f)\,\frac{\epsilon_l - \epsilon_e}{\epsilon_l + 2\epsilon_e}$$

f= volume fraction

ε_p dielectric const. of particles

- 1925 (Fricke, Morse): cell membrane thickness (4nm!)
- dipole moment of molecules [Thompson, J. Chem. Educ., 1966]

Electrical meas. of biological samples

- ~65% of body mass is water
- Cells, enzymes, proteins,…
  … "survive" only in water
  <u>+ a lot of ions</u>

Biomedical devices
Biosensors
Bioelectronics interfaces
Bio+ …

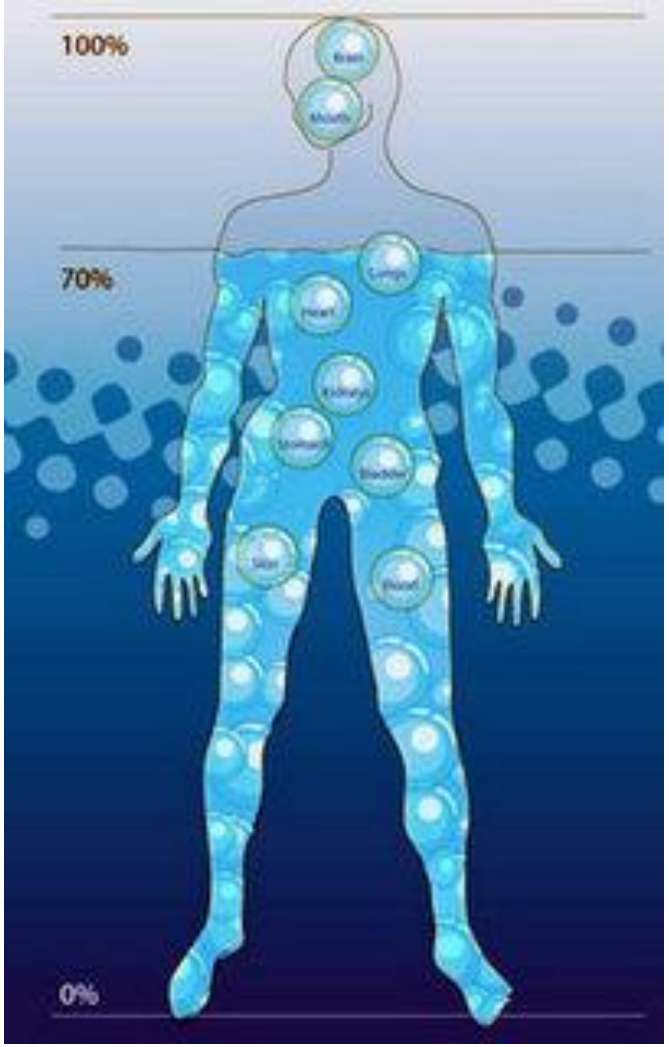

http://kangen.net/h2o-research/water-is-vital-to-life/

…must operate with ionic solutions (electrolytes)!

Electrolytes

Liquid (water)+ ions

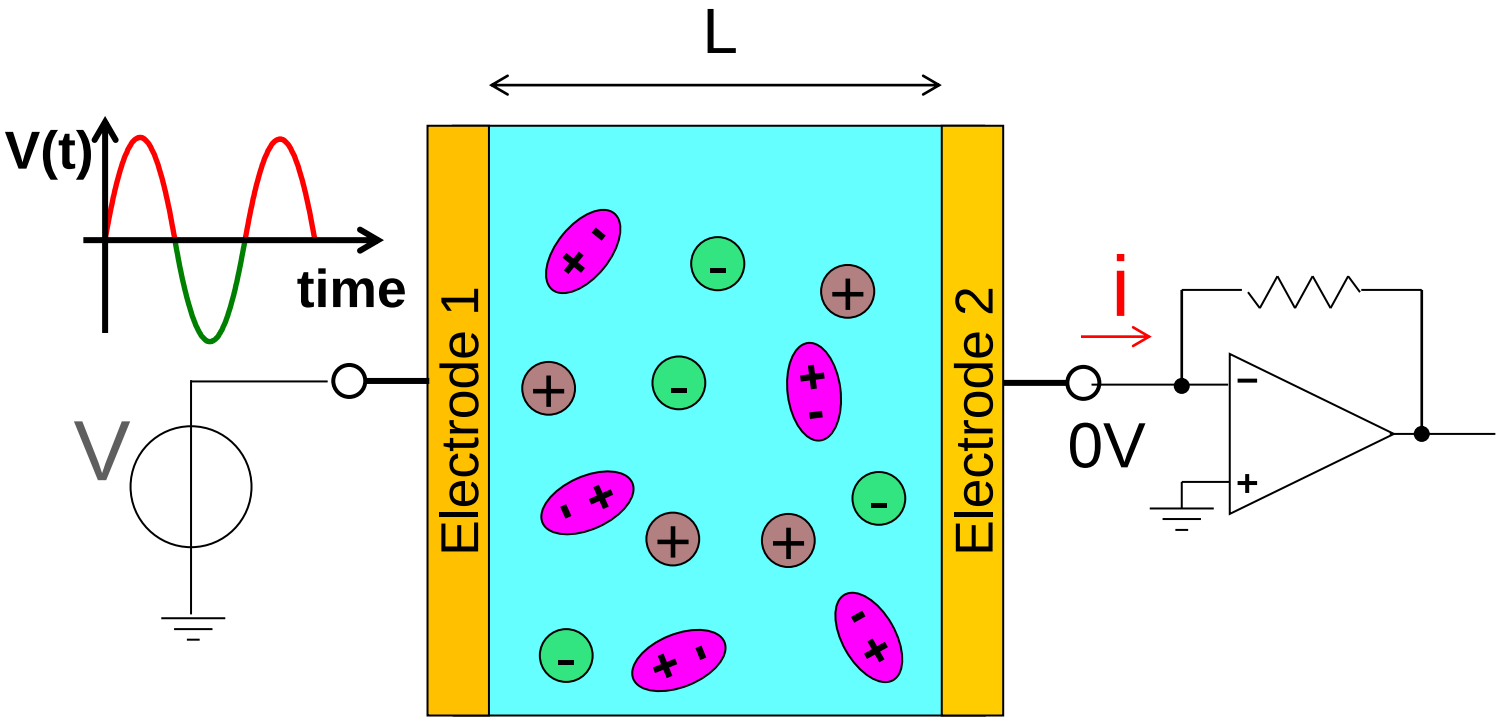

Polar molecule (water)

Ions

Electrolytes

Liquid + ions

Conductive behavior

charge transport

Current given by induced charge + transferred charge

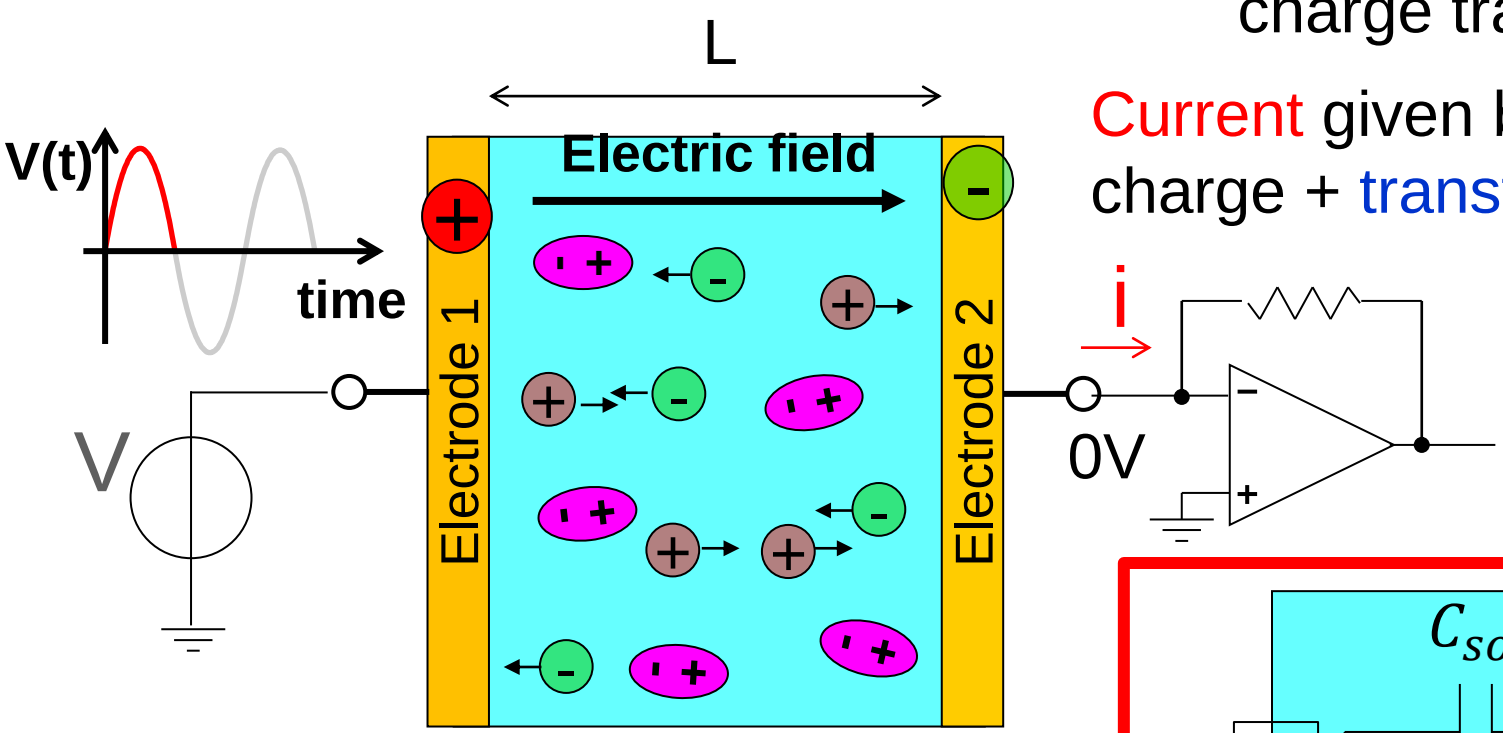

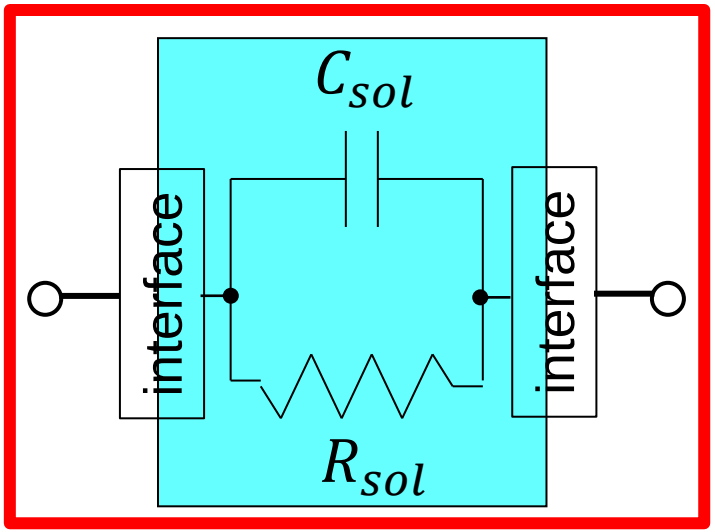

Polar molecule (water)

Ions

Electrolytes

Liquid + ions

Conductive behavior

charge transport

Current given by induced charge + transferred charge

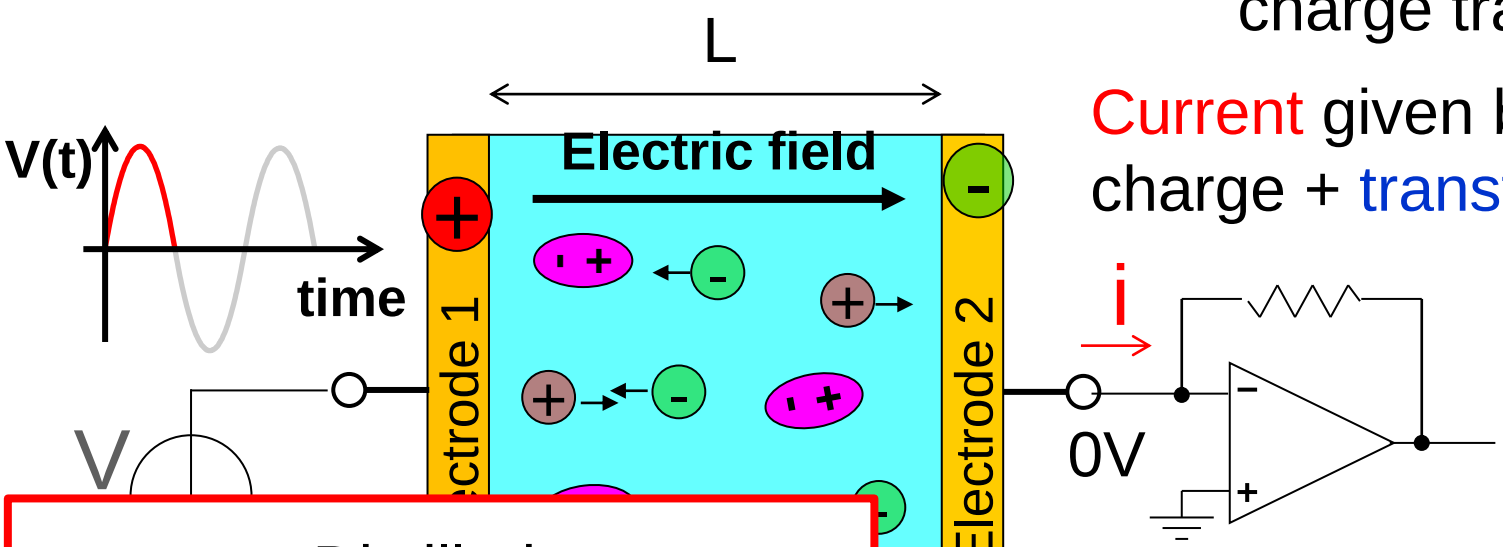

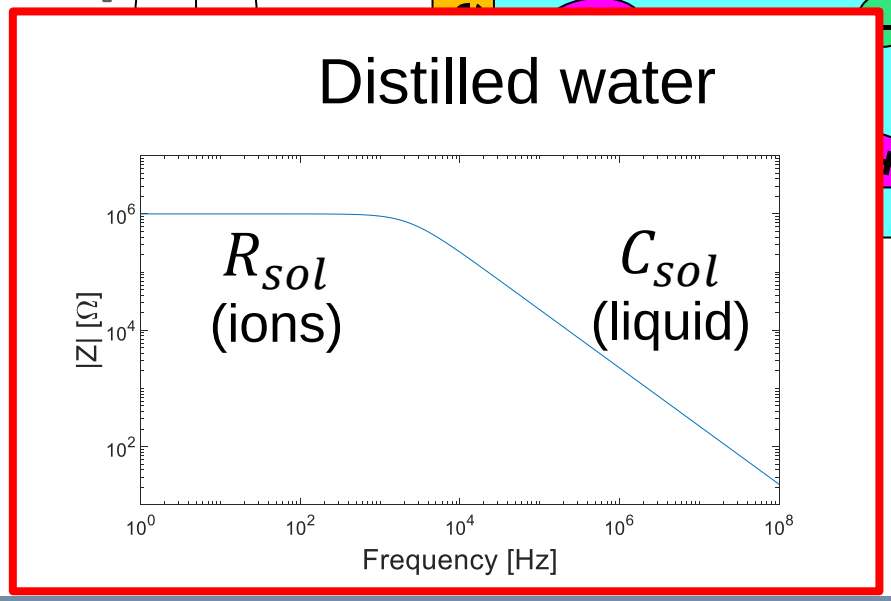

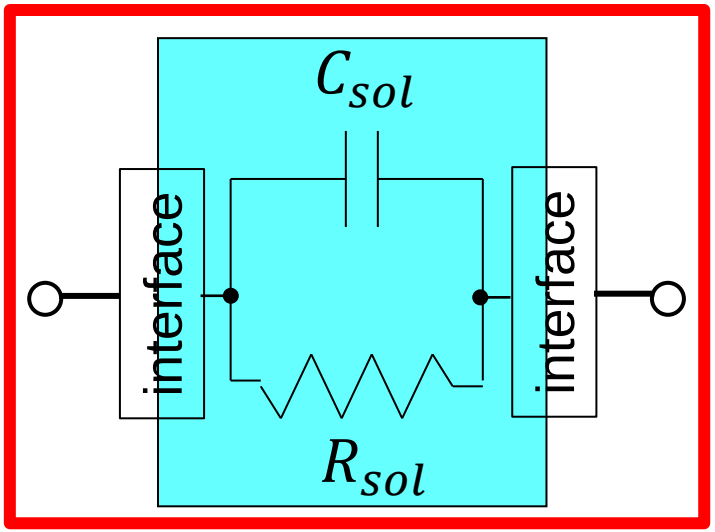

Charge Transport

- Diffusion

$$\propto \frac{\partial C_i(x)}{\partial x} \quad (C_i \text{ concentration})$$

- Drift (migration)

$$\propto C_i E(x) \quad (E \text{ electric field})$$

- Convection (fluid motion)
  - Natural (density gradient)
  - Mechanical (stirring, flow in microfluidic channel…)

$$\propto C_i v(x) \quad (v \text{ velocity of sol.})$$

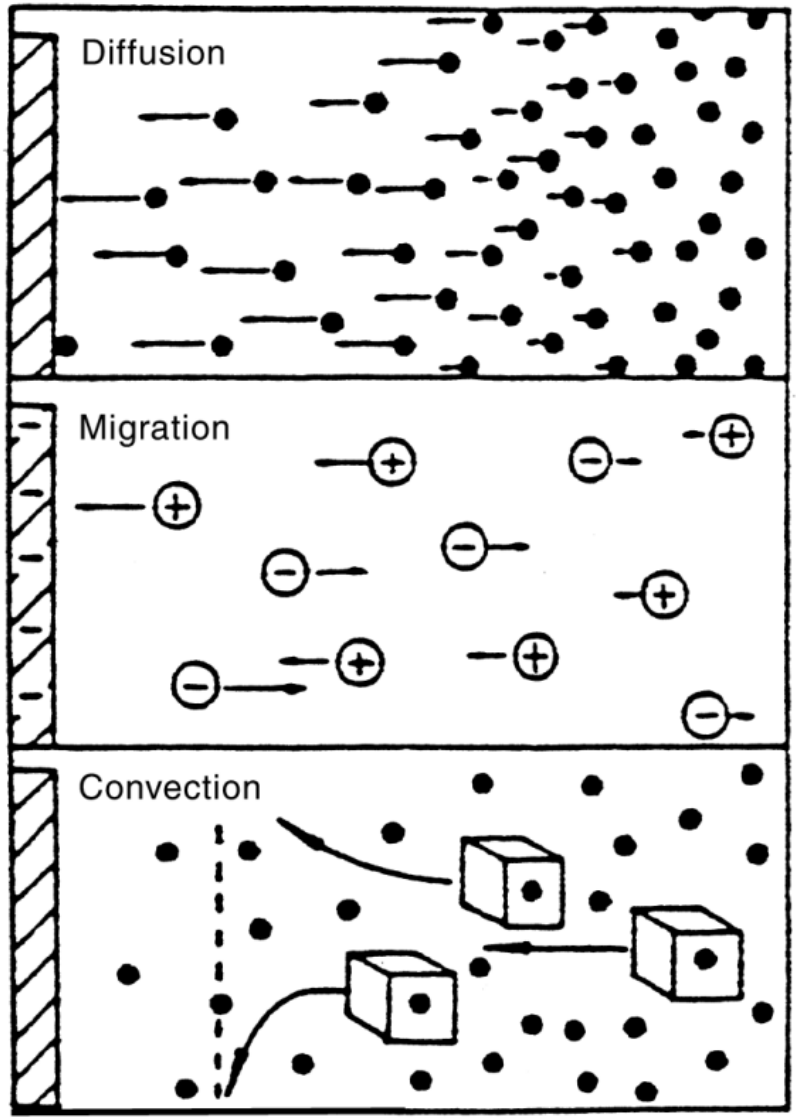

Wang, Analytical Electrochemistry

Drift current

Current density due to the charged species i:

$$J_i = z_i q\, p_i \mu_i E(x)$$

z_i= number of charge (dimensionless) of species i

q= elementary charge (1.6 10^{-19} C)

μ_i = mobility [cm^2/Vs]

E(x) = electric field [V/cm]

p_i = concentration in #ions/cm^3 = $C_i \cdot N_{Av}$ /1000

N_{Av}=Avogadro const.
$N_{Av} \approx 6 \cdot 10^{23}$ ions/mole

C_i= ***molar concentration*** = mol / liter

$$J_i = z_i F \mu_i \frac{C_i}{1000} E(x)$$

$$I_{TOT} = \sum_{i}^{\substack{all\ charged \\ species}} A J_i$$

F= Faraday constant = q N_{Av}

A= surface

$$\sigma_i = z_i q\, p_i \mu_i = \frac{z_i F \mu_i C_i}{1000}$$

conductivity (1/resistivity)

Mobilities and diffusion coefficients

(low concentration, no interionic interactions)

Ionic mobilities of various ions in water [19]

Cation	Mobility (10^{-4} cm^2/Vs)	Anion	Mobility (10^{-4} cm^2/Vs)
H^+	36.3	OH^-	20.5
Li^+	4	F^-	5.7
Na^+	5.2	Cl^-	7.9
K^+	7.6	Br^-	8.1
NH_4^+	7.6	I^-	8.0
Ca^{2+}	6.2	NO_3^-	7.4
Mg^{2+}	5.5	HCO_3^-	4.6
La^{3+}	7.2	SO_4^{2-}	8.3
Ag^+	6.4	$Fe(CN)_6^{3-}$	10.5
$(CH_3)_4N^+$	4.7		

$$\mu \approx 5 \cdot 10^{-4} \frac{cm^2}{Vs}$$

$$D \approx 10^{-5} \frac{cm^2}{s}$$

Silicon:

$\mu \approx 1000$ cm^2/Vs

D ≈ 20 cm^2/s

W. Shinwari ,Microelectronics Reliability 47 (2007) 2025–2057

Equivalent circuit of bulk solution

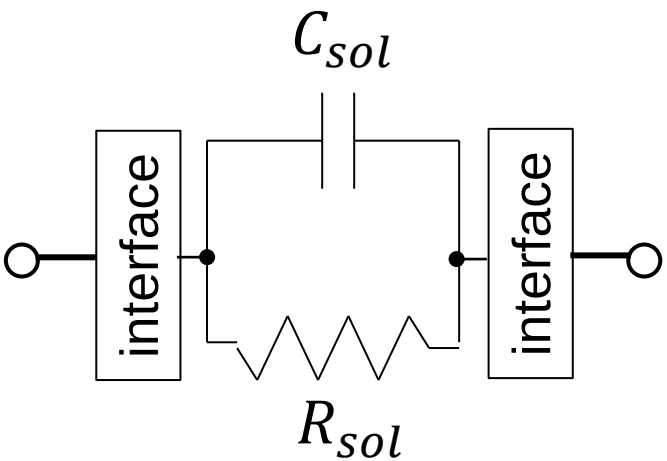

$$C_{sol} \propto \epsilon_{liquid}$$

$$R_{sol} \propto \rho \propto \frac{1}{\mu \cdot Concentration}$$

C_{sol} and R_{sol} are *geometry-dependent*

Parallel plate electrodes, area A

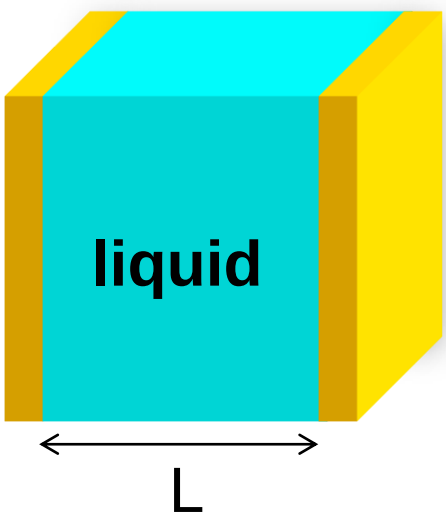

$$C_{sol} = \epsilon \frac{A}{L}$$

$$R_{sol} = \rho \frac{L}{A}$$

Small disk: diameter d ≪ L

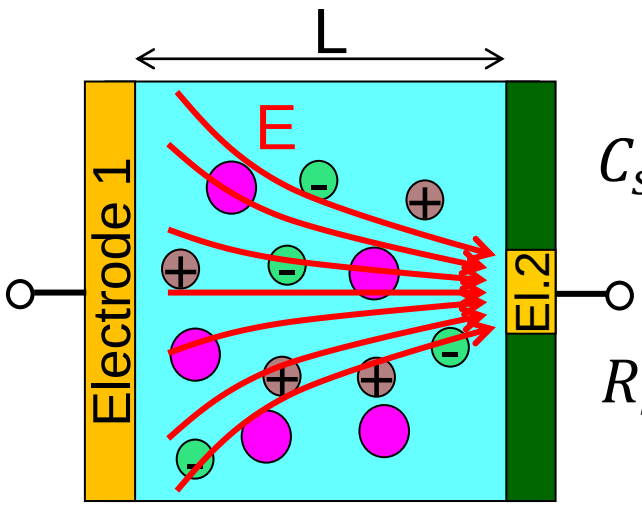

$$C_{sol} = \epsilon\, 2d$$

$$R_{sol} = \rho \frac{1}{2d}$$

Dielectric relaxation time

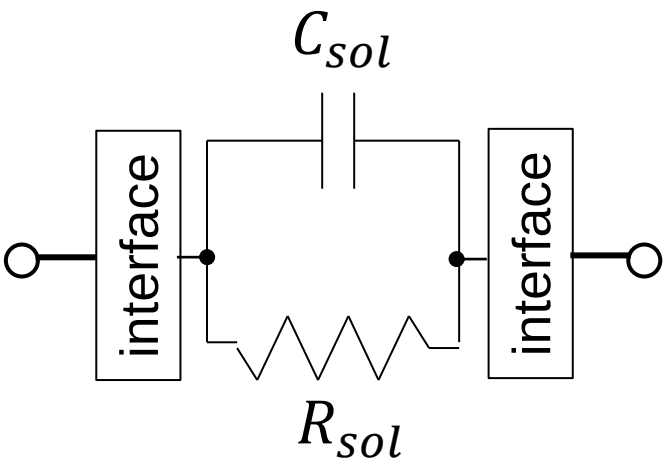

C_{sol} and R_{sol} are *geometry-dependent*

Dielectric relaxation time:

$$\tau_d = R_{sol} \cdot C_{sol} = \rho\epsilon \propto \frac{\epsilon}{\mu \text{ Concentration}}$$

geometry-independent

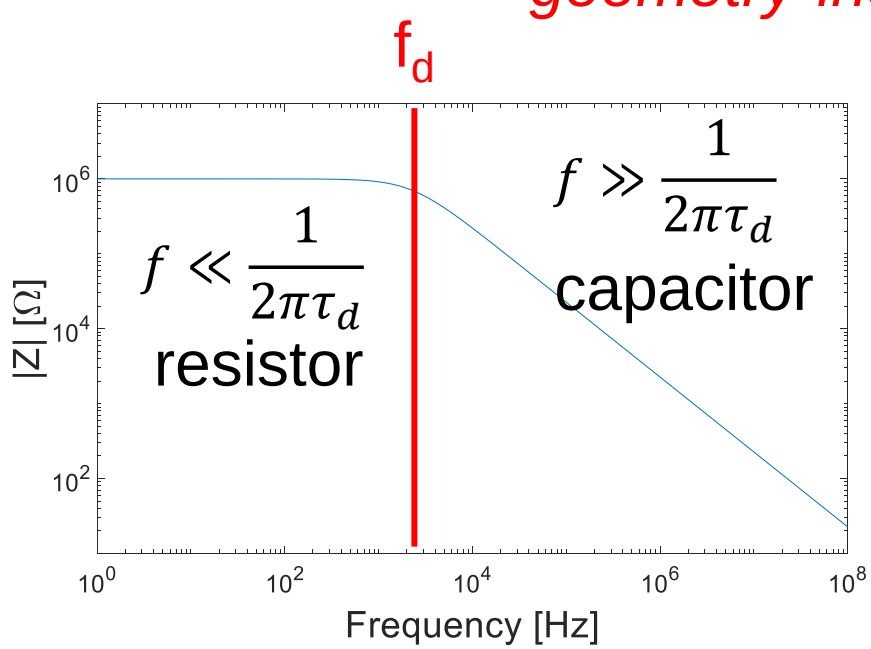

bulk solution is a resistor up to $f_d \approx \frac{1}{2\pi\rho\epsilon} \propto Concetration$

Examples of solution

- pure water:

  pH = 7 → C_{H^+} = 10^{-7} M →

  ➡ $\tau_d \approx 140\mu s$, $f_d \approx 1$ kHz

- tap water:

  $\rho \approx 10\ k\Omega \cdot cm$, $\varepsilon_r \approx 78$

  ➡ $\tau_d \approx 70ns$, $f_d \approx 2.3$ MHz

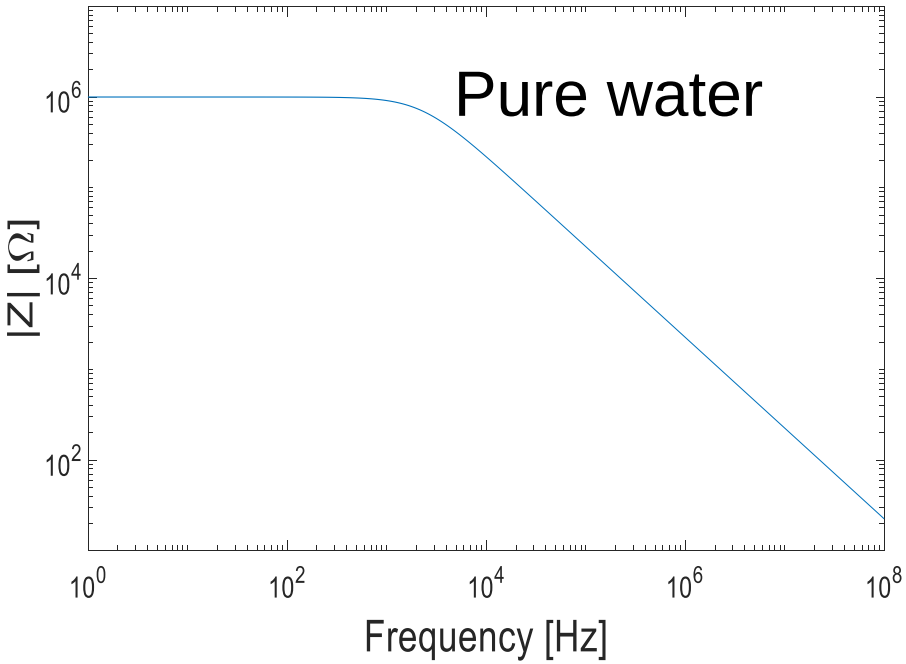

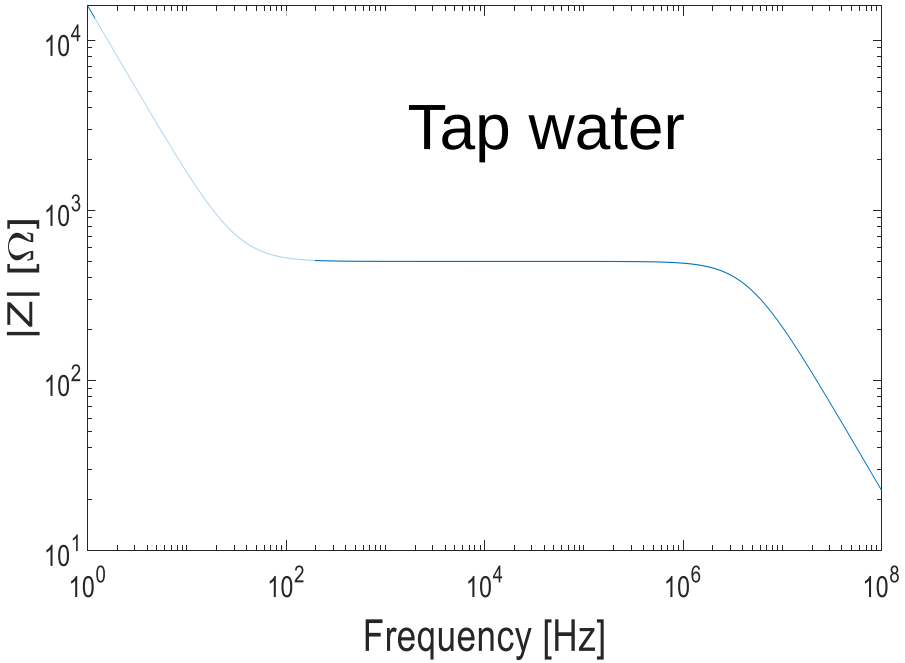

Examples of solution

- pure water:

  pH = 7 → C_{H^+} = 10^{-7} M → $\rho \approx 20\ M\Omega \cdot cm$, $\varepsilon_r \approx 78$

  ➡ $\tau_d \approx 140\mu s$, $f_d \approx 1$ kHz

- tap water:

  $\rho \approx 10\ k\Omega \cdot cm$, $\varepsilon_r \approx 78$

  ➡ $\tau_d \approx 70ns$, $f_d \approx 2.3$ MHz

- Phosphate Buffered Saline (PBS) commonly used for ***in-vitro biological research***

  Dulbecco's formula: 137mM NaCl; 8.10mM Na_2HPO_4; 2.68mM KCl;…

  1M means $N_A = 6 \cdot 10^{23}$ molecules per liter → ≈ 10^{20} ions/cm^3 !

  $\rho \approx 60\ \Omega \cdot cm$, $\varepsilon_r \approx 78$

  ➡ $\tau_d \approx 0.5ns$, $f_d \approx$ 350 MHz

  same ρ of silicon doped with $\approx 10^{14}\ cm^{-3}$ ***moderate conductor*** for electronics

Electrical current in electrolytes

Liquid + ions

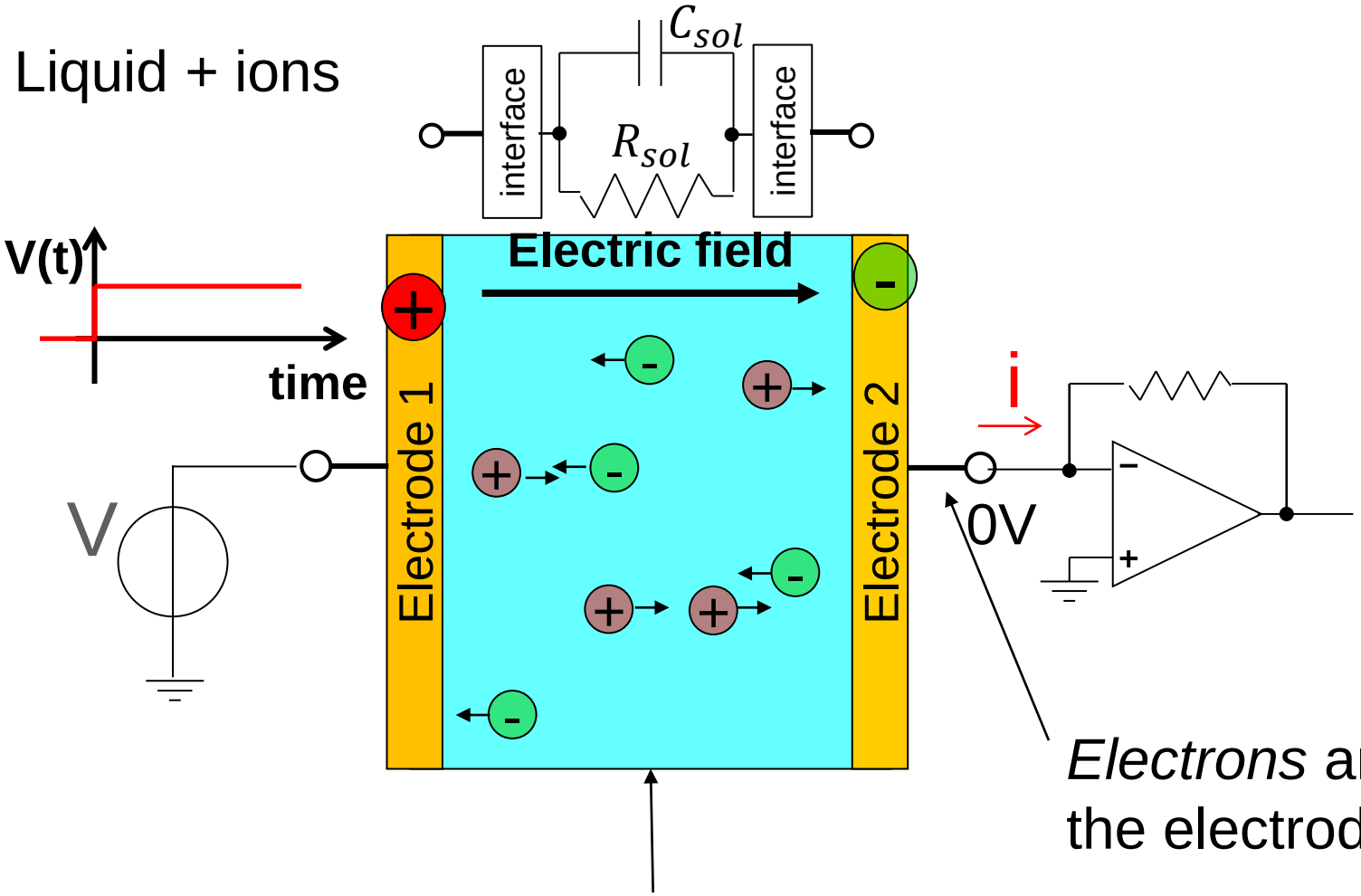

Electrons are moving in the electrodes

Ions are moving in the liquid

Electrical current in electrolytes

Liquid + ions

Accumulation of ions *in absence* of charge transfer at the interface

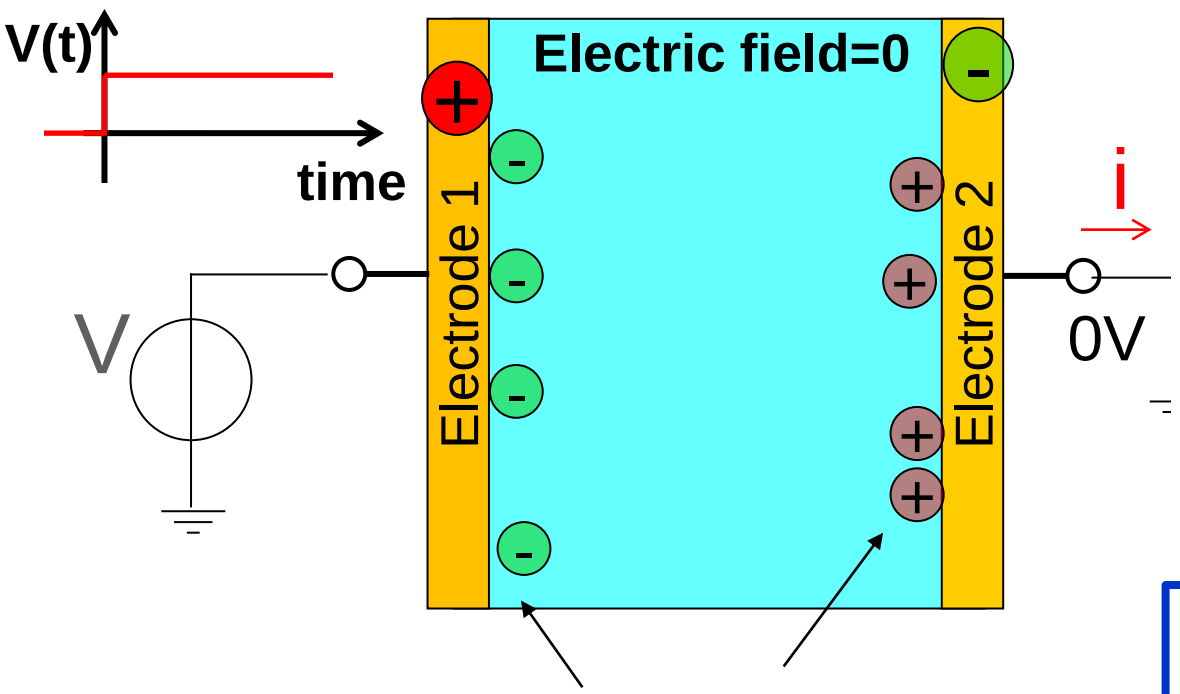

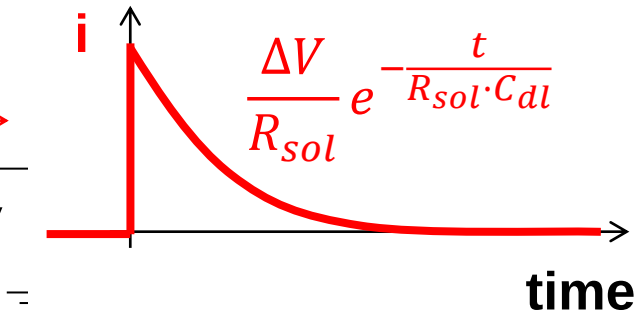

Ions shield the electrodes
→ no further charge transport

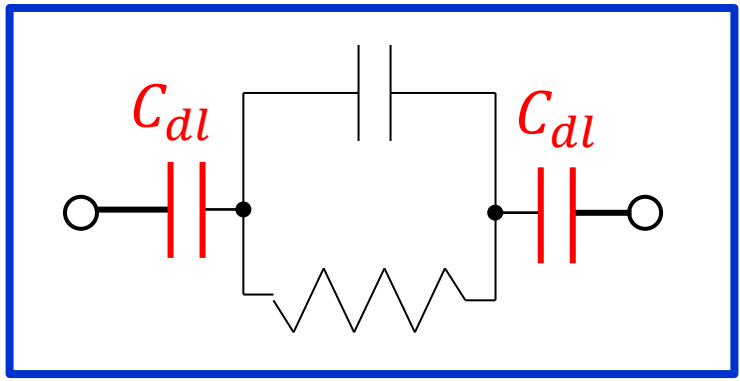

Metal-liquid interface

Metal

Interphase region

Bulk Solution

water molecule

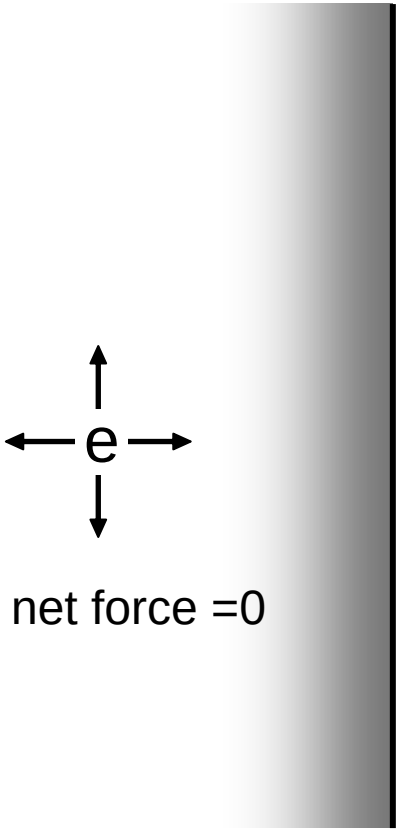

anisotropic forces on electrons, ions, water molecules

Charge redistribution

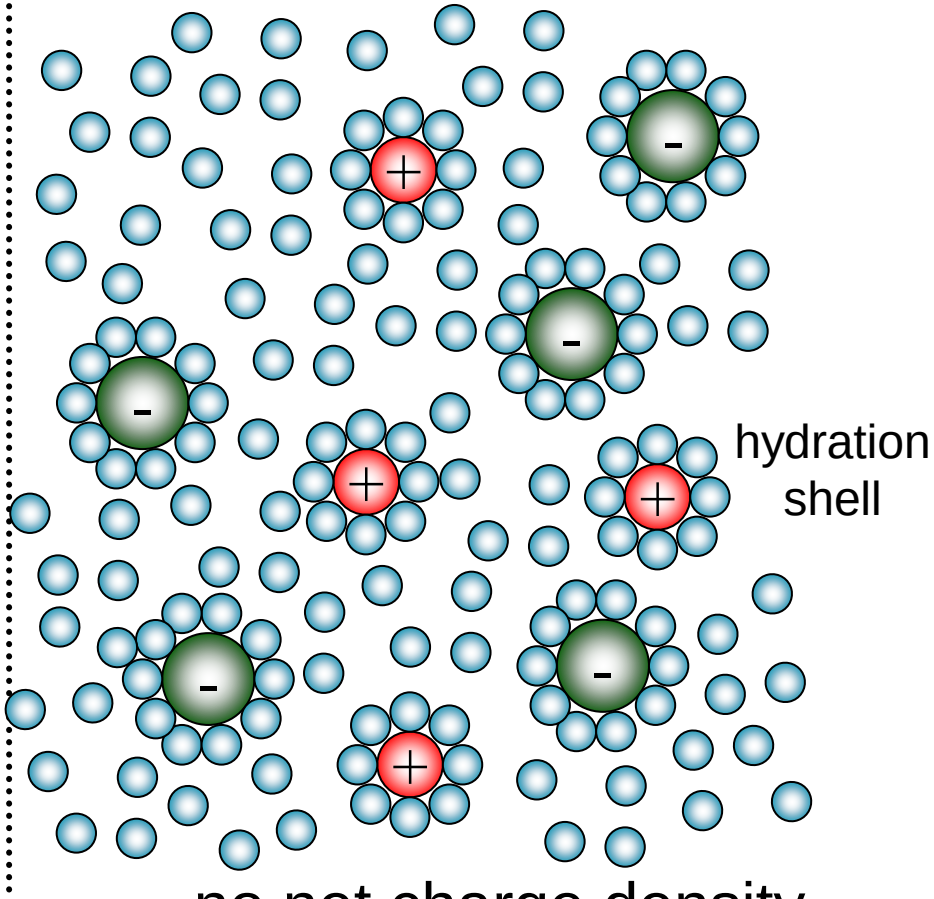

Free electrons in a crystal

no net charge density
no net dipole orientation

Charge redistribution at the interface

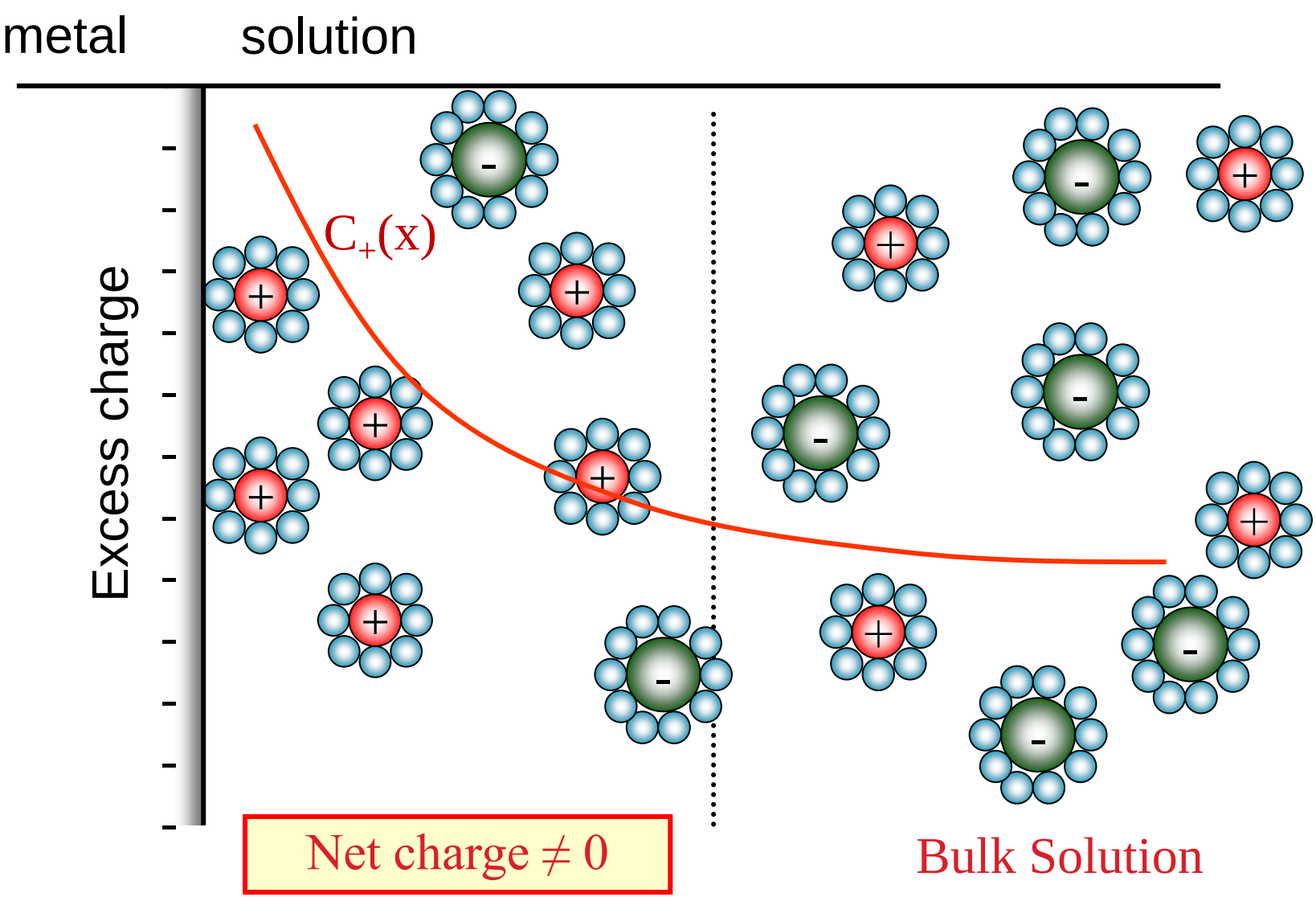

interface electric field: 10-100MV/cm!!!

Electrical Model (Stern model)

Restriction to the closest approach of ions

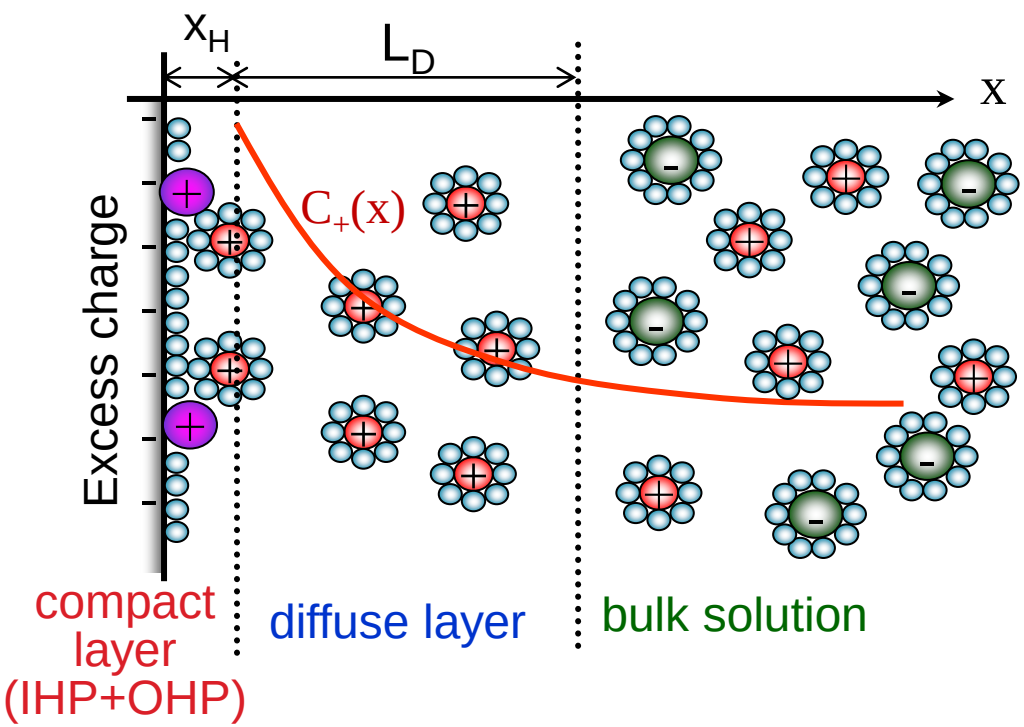

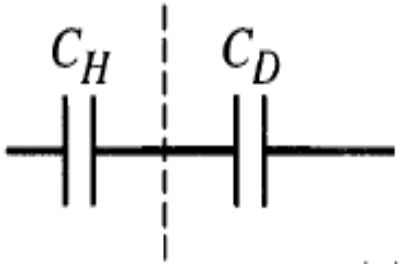

IHP (≈0.2nm): inner Helmholtz plane: specifically adsorbed ions (bond formation / desolvated)

OHP (≈0.4nm) outer Helmholtz plane: minimum distance of solvated ions (nonspecifically adsorbed, only electrostatic force)

Diffuse layer (≈1-10nm): distribution of ions from OHP to bulk due to thermal motion

Compact layer capacitance

Restriction to the closest approach of ions

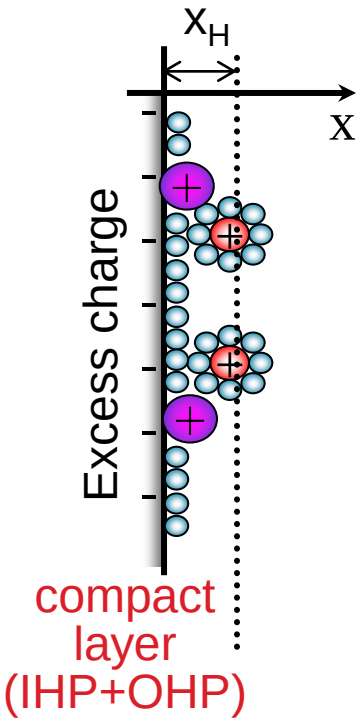

What dielectric constant?

high electric field → water molecules oriented

↓

dielectric saturation

Fumagalli lessons

$\varepsilon_{H20} = 78$

↓

$\varepsilon_{H20,sat} \approx 6$

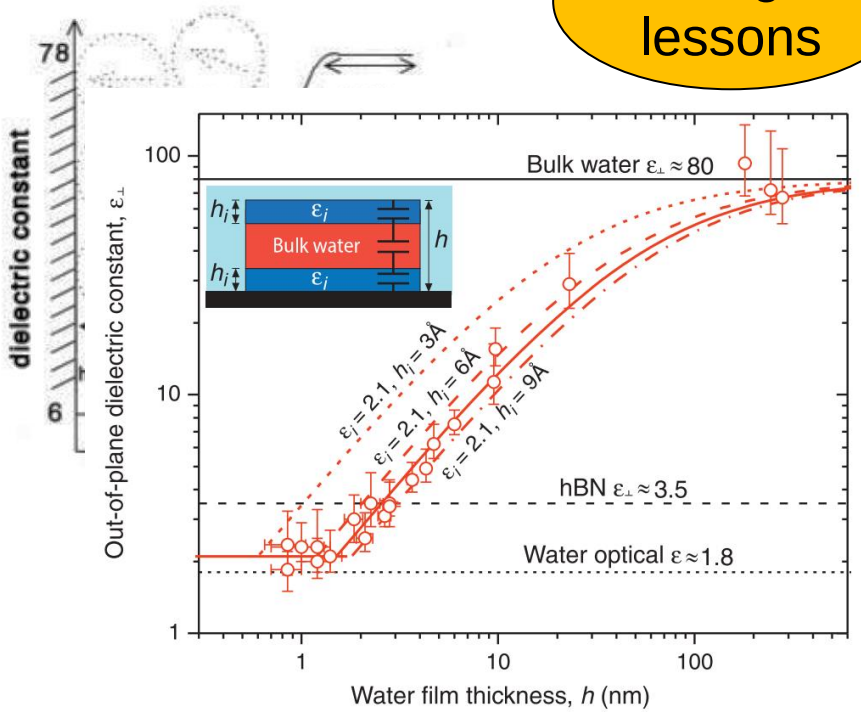

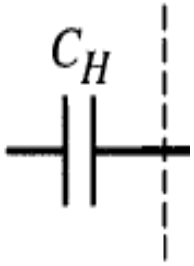

$$C_H = \epsilon \frac{A}{x_H}$$

J.O.M. Bockris. Modern Electrochemistry

L. Fumagalli, et al. "Anomalously low dielectric constant of confined water," *Science*. 2018.

Diffuse layer capacitance

Ion concentration determined by Boltzman statistics + Poisson eq.

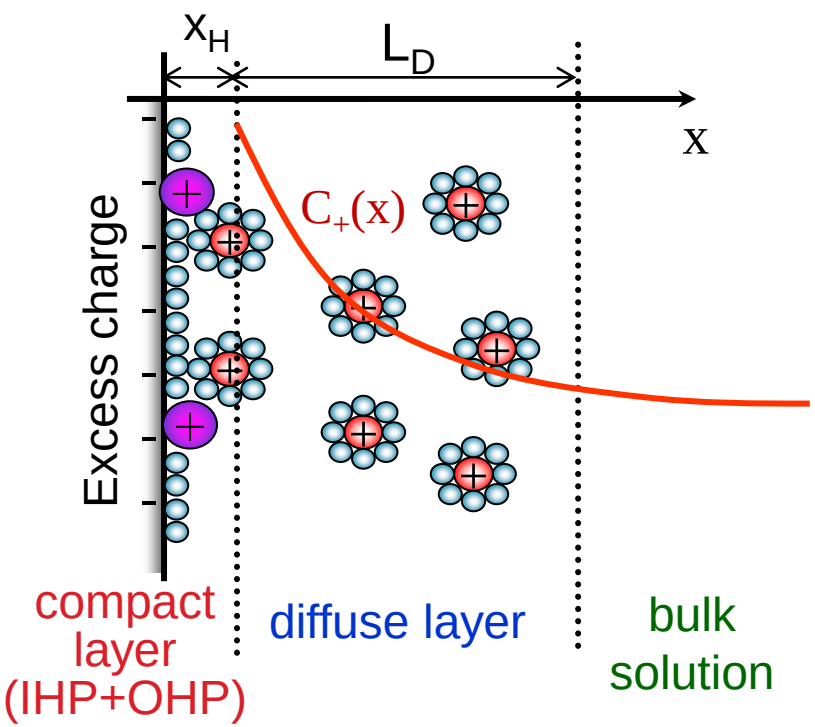

$$\frac{\tanh(zq\phi/4kT)}{\tanh(zq\phi_0/4kT)} = \exp\left(-\frac{x}{L_D}\right)$$

zq= charge of the single ion

ϕ_0= potential drop across the diffuse layer ($V-V_{zero\ charge}$)

for $\phi_0 < 50mV$:

$$\phi(x) \cong \phi_0 \exp(-x/L_D)$$

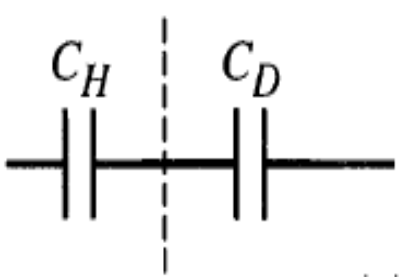

$$\boxed{L_D = \sqrt{\frac{\epsilon kT}{2z^2q^2C_0}}}$$

Debye length
diffuse layer "thickness"

C_0 = ion concentration in the bulk

Diffuse layer capacitance

Ion concentration determined by Boltzman statistics + Poisson eq.

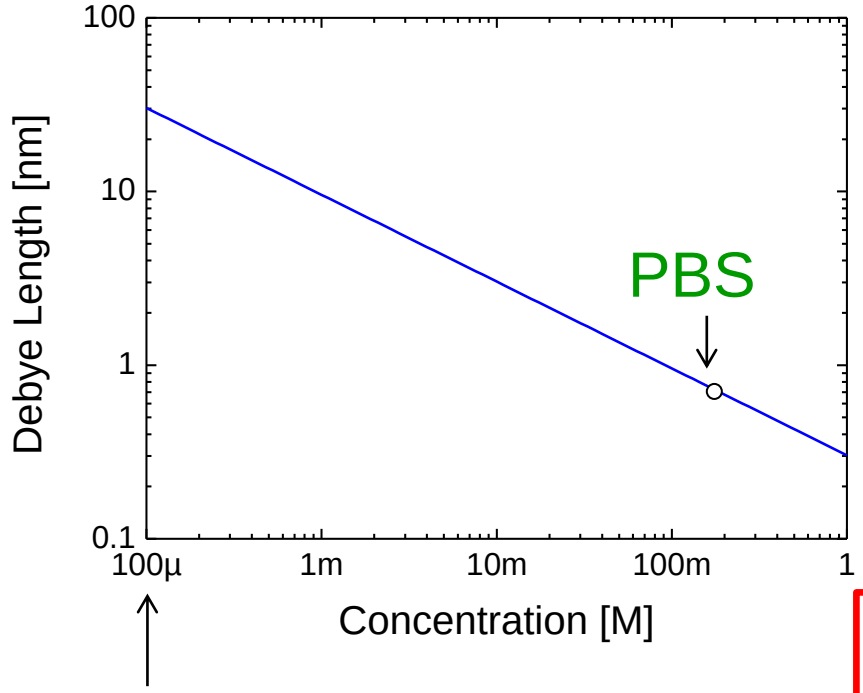

$$\frac{\tanh(zq\phi/4kT)}{\tanh(zq\phi_0/4kT)} = \exp\left(-\frac{x}{L_D}\right)$$

zq= charge of the single ion

ϕ_0= potential drop across the diffuse layer ($V-V_{zero\ charge}$)

for $\phi_0 < 50mV$:

$$\phi(x) \cong \phi_0 \exp(-x/L_D)$$

$$L_D = \sqrt{\frac{\epsilon kT}{2z^2q^2C_0}}$$

Debye length

diffuse layer "thickness"

6mg/liter of NaCl

pure water, pH=7 (100nM): $L_D \approx 1\mu m$

C_0 = ion concentration in the bulk

Diffuse layer capacitance

Ion concentration determined b

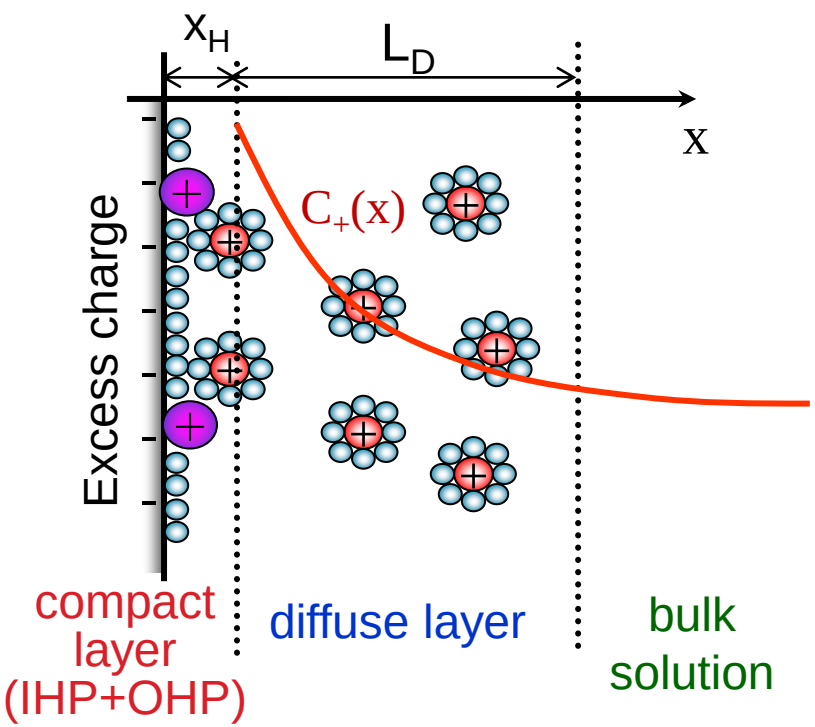

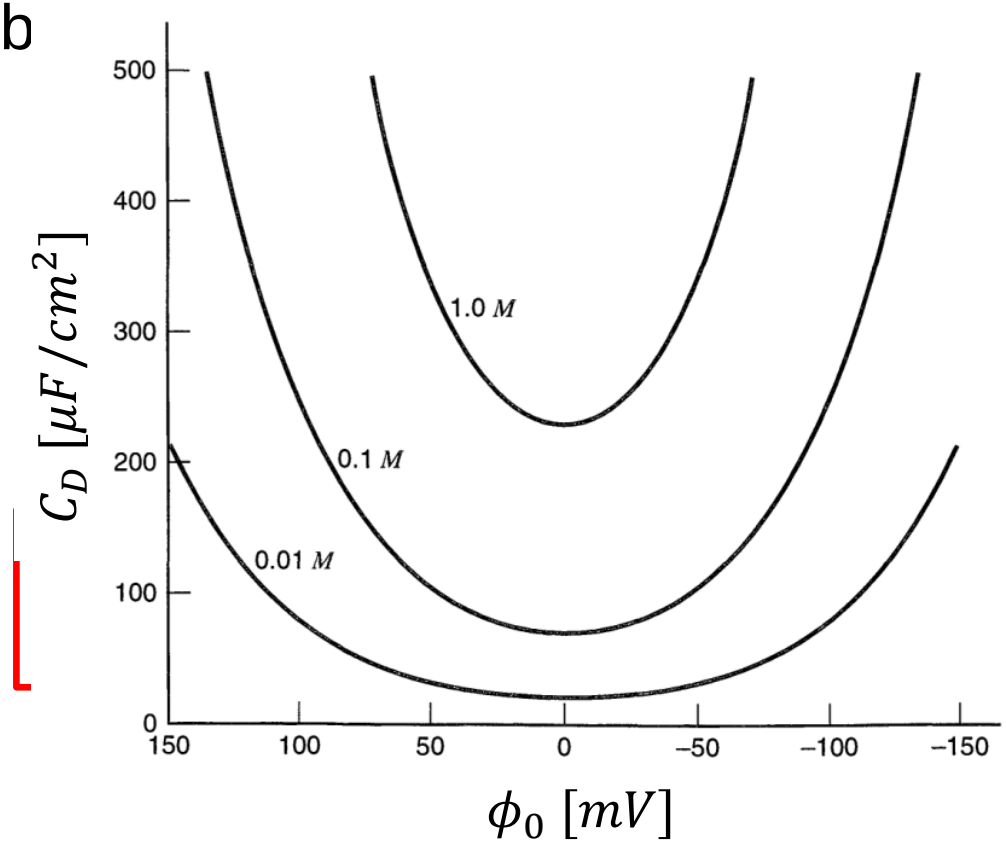

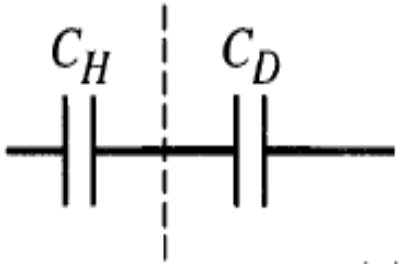

$$C_D = \frac{dQ}{d\phi_0} = \epsilon \frac{A}{L_D} \cosh\left(\frac{zq\Phi_0}{2kT}\right)$$

depends on the potential (Φ_0) and concentration (L_D)

Electrical Model (Stern model)

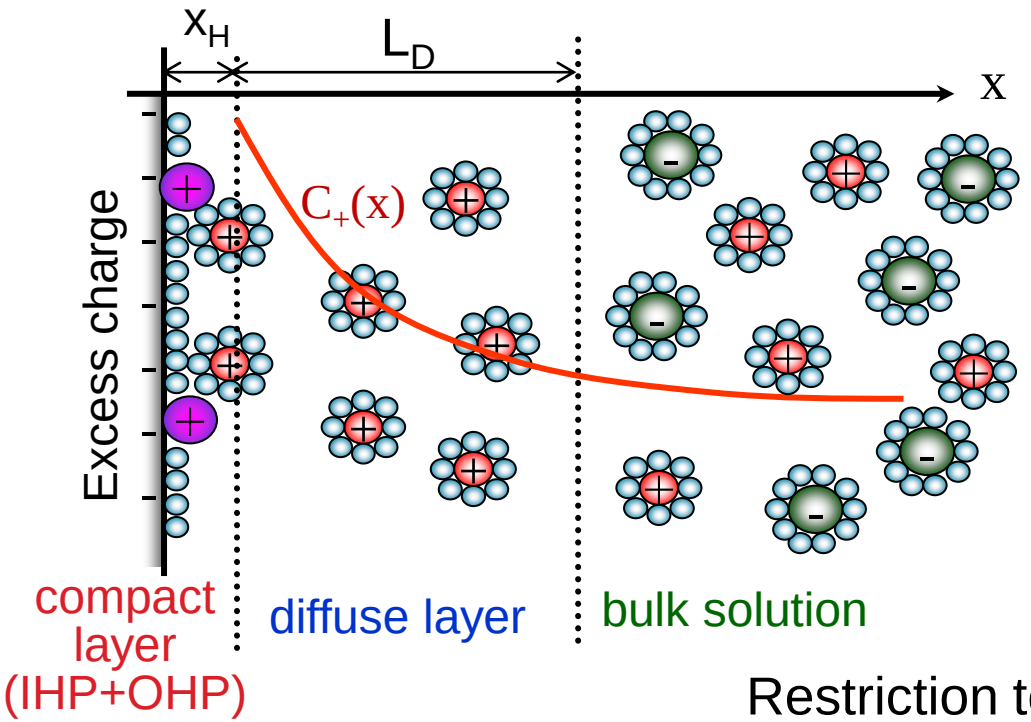

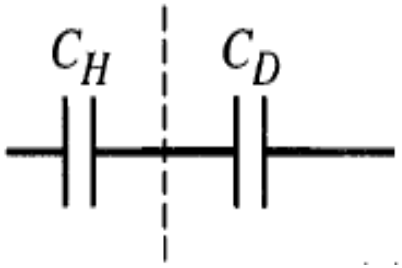

Restriction to the closest approach of ions

Variable charge density: diffuse layer

$$\frac{1}{C_{DL}} = \frac{x_H}{\epsilon_{sat}} + \frac{L_D}{\epsilon \cosh\left(\frac{zq\Phi_0}{2kT}\right)}$$

Double layer capacitance

Stern model

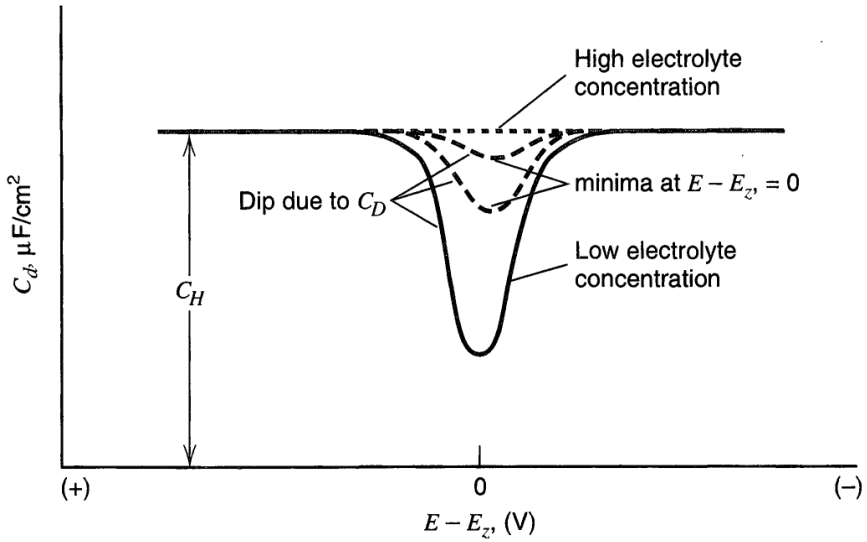

Bard, Faulkner, Electrochemical methods

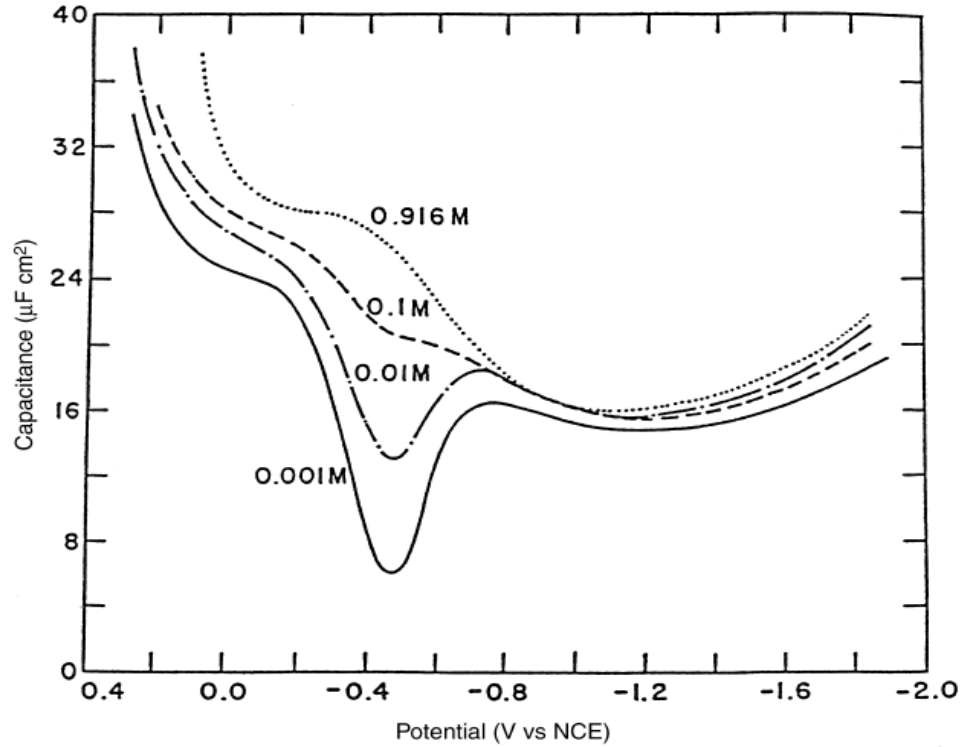

FIGURE 1-13 Double-layer capacitance of a mercury drop electrode in NaF solutions of different concentrations. (Reproduced with permission from reference 5.)

Wang, Analytical Electrochemistry

Minimum of C_{dl} at the potential of zero charge (PZC)

PBS:

C_{dl}= 10 - 40μF/cm²
= 0.1- 0.4pF/μm²

C_H depends on potential, saturated dielectric, ion-ion interaction, adsorption,…

Well-defined electrode surface

Strong sensitivity to the atomic structure of the surface !

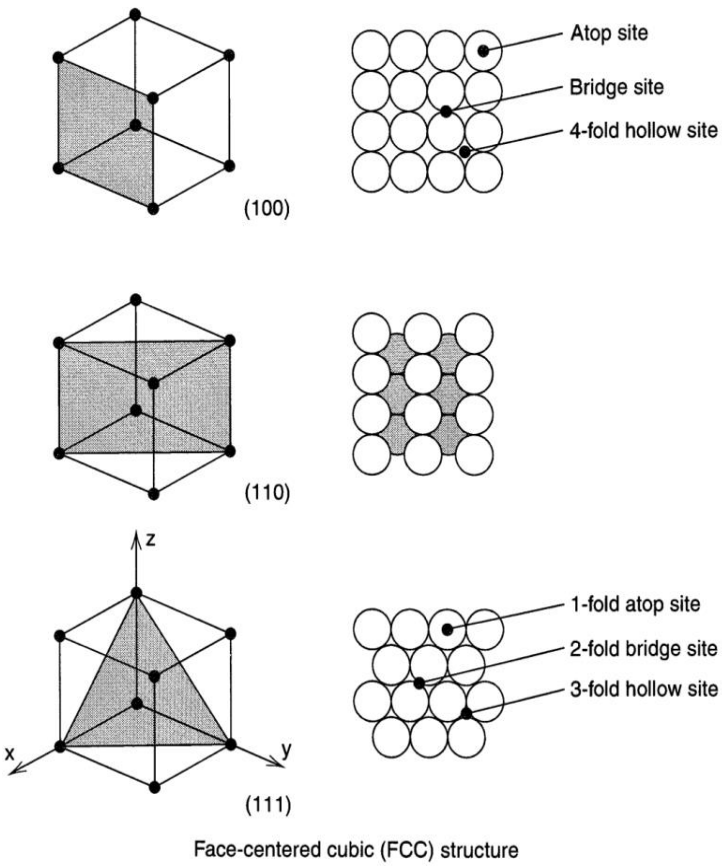

Bard, Faulkner, Electrochemical methods

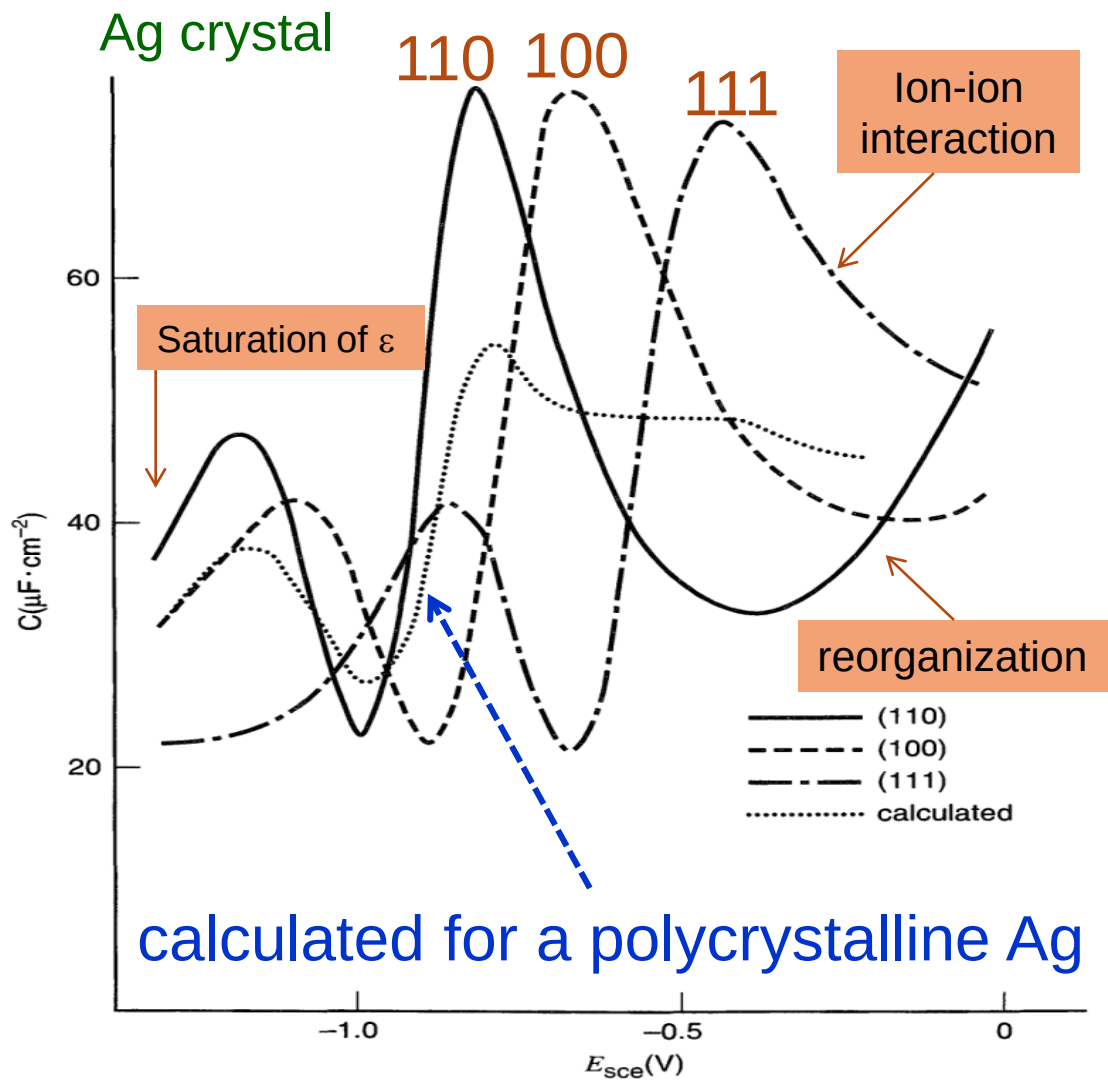

«Real area» of an electrode

C_{dl} depends on the first few nm of the interface (e.g. in PBS)

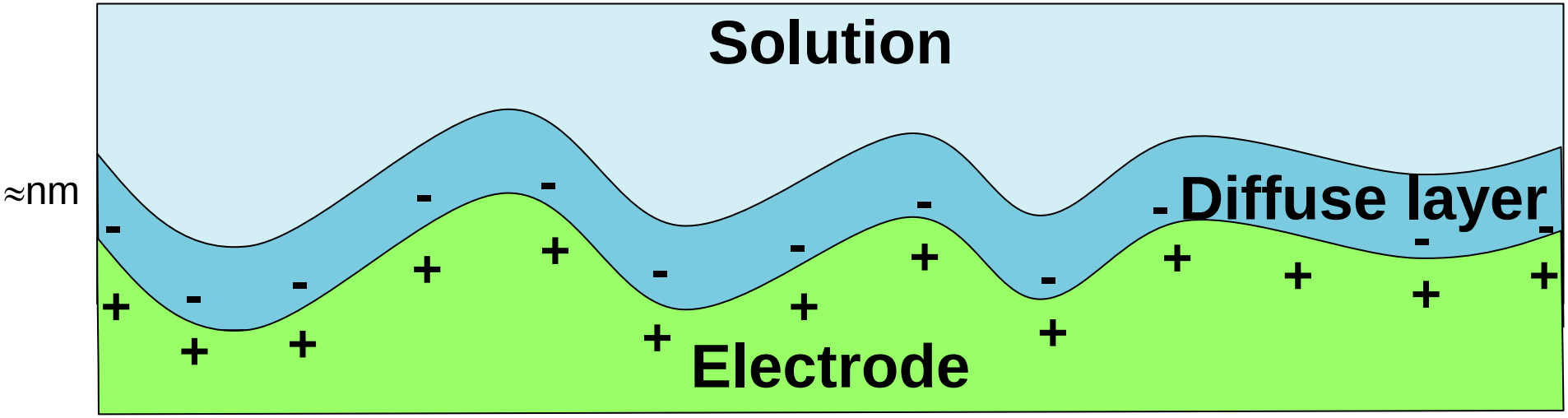

Double layer follows hills and valleys having size ≫ Debye length

↓

nanoscale area of C_{dl} could be 2-3 times the macroscopic "geometrical area"

Atomic scale disorder

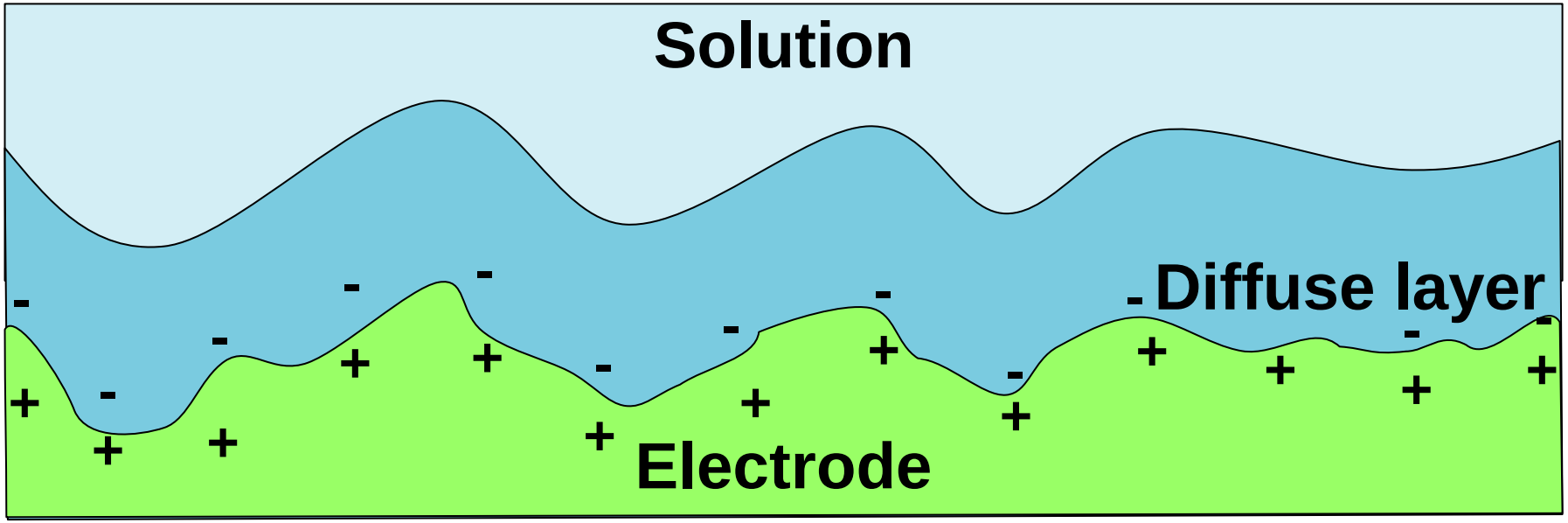

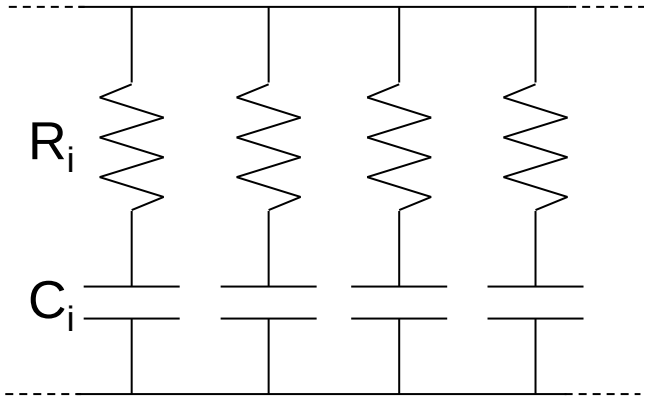

distribution of time constants

$$\frac{1}{Z} = Y = \sum_i \left(R_i + \frac{1}{sC_i} \right)^{-1}$$

Constant Phase Element

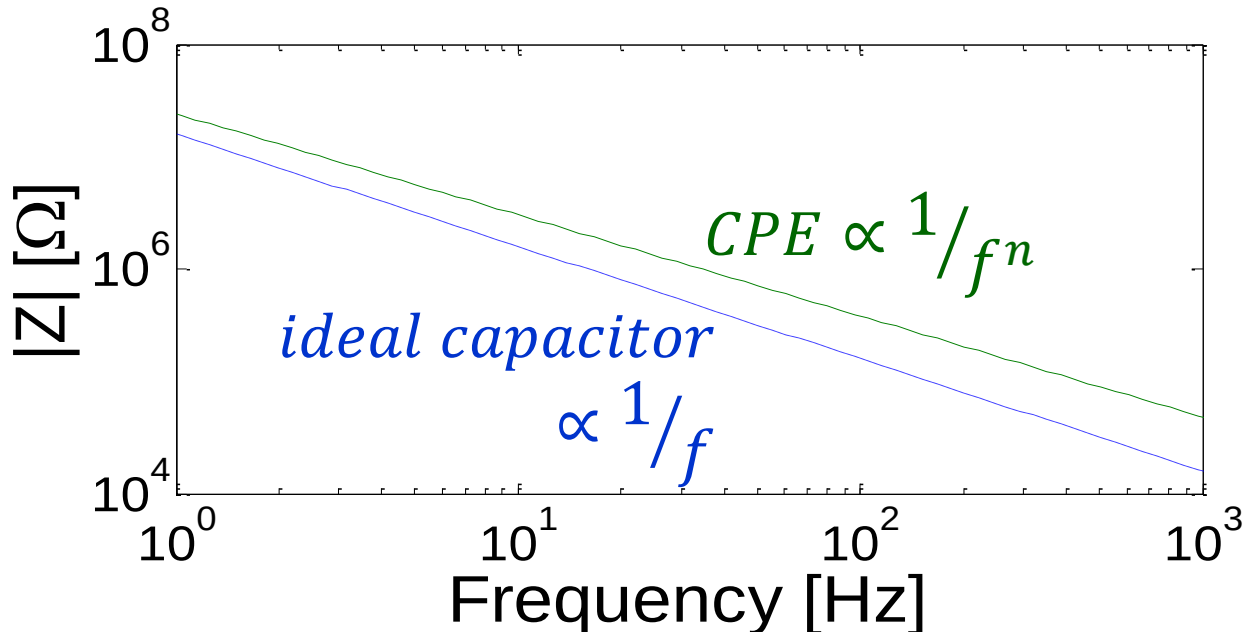

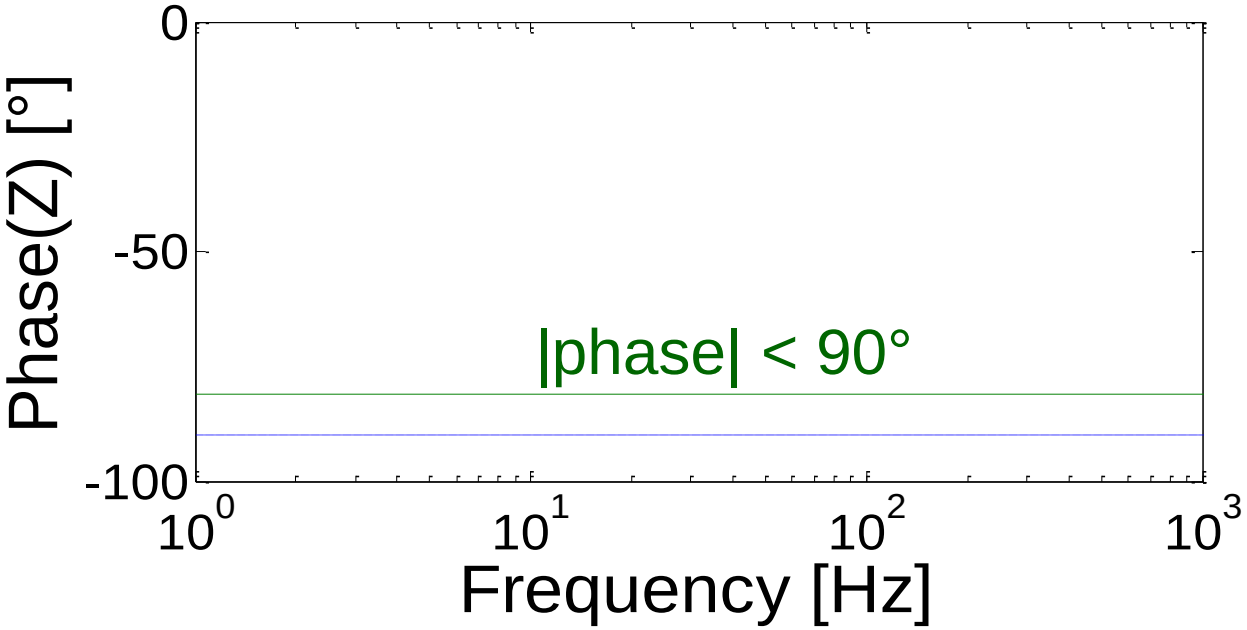

"Slope" of C_{dl} is less than 1 (n = 0.8-0.9)

$$Z_{CPE} = \frac{1}{Q(j\omega)^n}$$

surface disorder, porous electrodes, adsorption, …

Excellent for fitting experimental data (no clear physical insight)

CPE: Look at the Phase

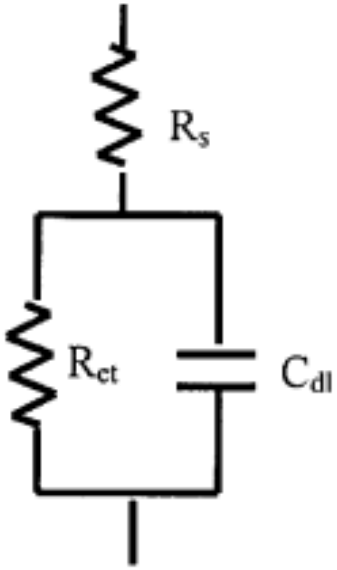

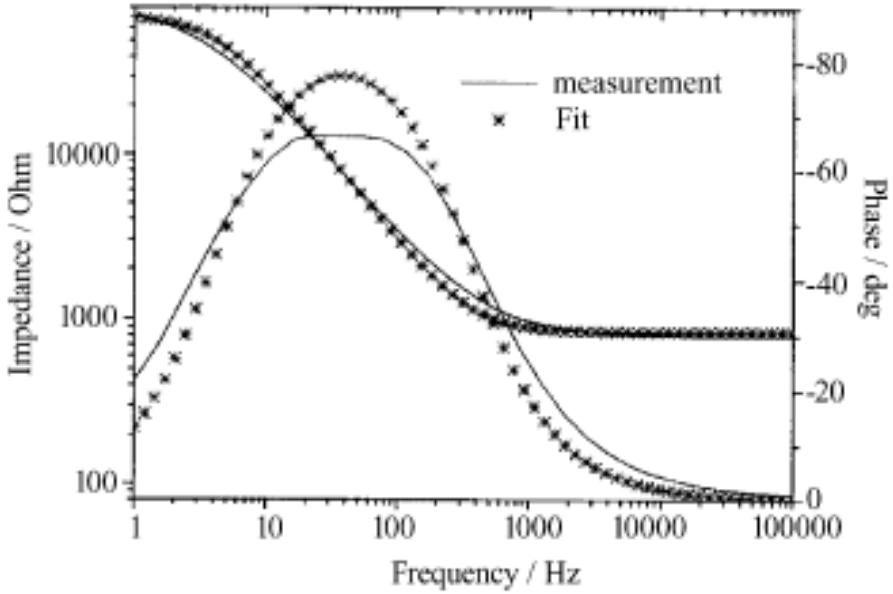

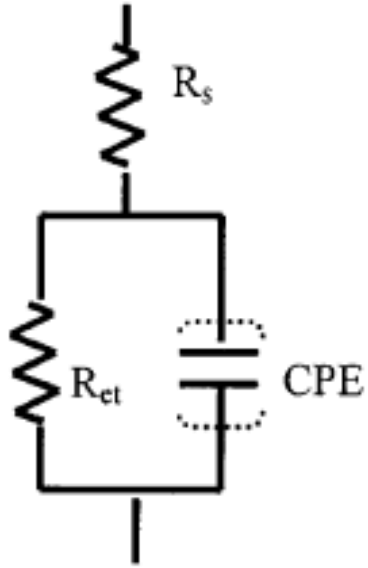

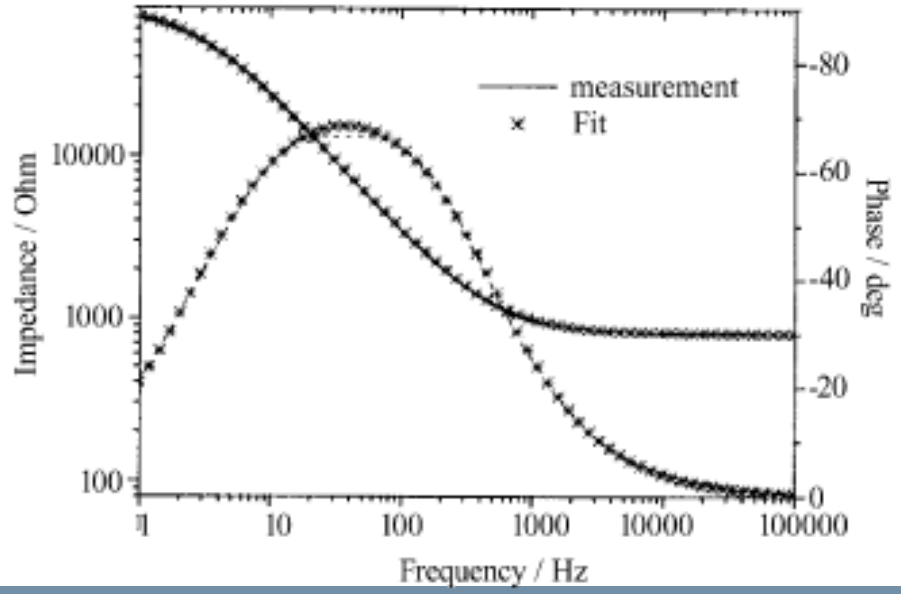

Ding et al. / Electrochimica Acta 50 (2005) 3660–3666

Summary

- Ions make the liquid a conductor: very small mobility (≈ $5 \cdot 10^{-4}$ cm^2/Vs), but the ion concentration could be high (PBS: 10^{20} ions/cm^3)
- $R_{solution} = \rho \cdot$ geometrical factor, $C_{solution} = \varepsilon$ / geom. factor

  $$1/\rho = \sum z_i q\, p_i \mu_i = \sum z_i q \frac{N_{av} C_i}{1000} \mu_i, \quad \varepsilon = 78 \text{ (water)}$$
- Resistive behavior up to frequency ≈ $1/(2\pi\rho\epsilon)$
  physiological solution (PBS) is a "reasonable" conductor up to ≈350MHz
- Metal-liquid interface: a complex charge redistribution
  → double-layer capacitance
- C_{dl} has an enormous value (PBS: 10-40μF/cm^2)
- Double layer is sensitive to the roughness and atomic structure of the surface → C_{dl} is not a very well-controlled value
- In many practical cases, C_{dl} is an imperfect capacitor
  → constant phase element: $Z_{CPE} = \frac{1}{Q(j\omega)^n}$

Small signal equivalent model